CREALITY K2 PLUS DRAWER

CREALITY K2 PLUS DRAWER

GOT A CREALITY K2 PLUS AND WANT TO TURN IT FROM "JUST A PRINTER" INTO A FULL WORKSTATION?SAY HELLO TO THE QIDI Q2 DRAWER SYSTEM, DESIGNED FOR ORDER, CONVENIENCE, AND A LITTLE BIT OF FUN.

WHAT'S INSIDE:

POOP DRAWER

THE PERFECT SPOT FOR ALL THAT FILAMENT "POOP." NO MORE DIGGING AROUND THE PRINTER LIKE A TREASURE HUNT.

POOP CHUTE

WHEN THE DRAWER'S FULL… ZIP! EMPTY IT IN SECONDS. CLEAN AND PAINLESS.

TOOL DRAWER

KEEPS EVERYTHING EXACTLY WHERE IT SHOULD BE.AVAILABLE IN TWO STYLES:

- *CUSTOM STORAGE BINS*
- *GRIDFINITY 42MM COMPATIBLE FOR ALL YOUR EXISTING ORGANIZERS.*

DUAL BUILD PLATE HOLDERS

DEDICATED HOLDERS FOR TWO BUILD PLATES.
NO MORE BUILD PLATES WANDERING AROUND YOUR WORKSHOP LIKE LOST PUPPIES.

LED STRIP INTEGRATION

LIGHT UP THE DRAWERS OR DISPLAY PRINTER STATUS ON THE FRONT. FUNCTIONAL AND JUST THE RIGHT AMOUNT OF FLASHY.

HULA FEET OPTION

BECAUSE STABILITY IS GREAT, BUT STABILITY WITH STYLE IS BETTER.

ALL MATERIAL PRODUCED AND PROVIDED HAS BEEN CONCEIVED, AUTHORED AND PRODUCED BY ENRICO MAZZAROL - ALL RIGHTS RESERVED.

KEY CARATERISTICS

CREALITY K2 PLUS DRAWER

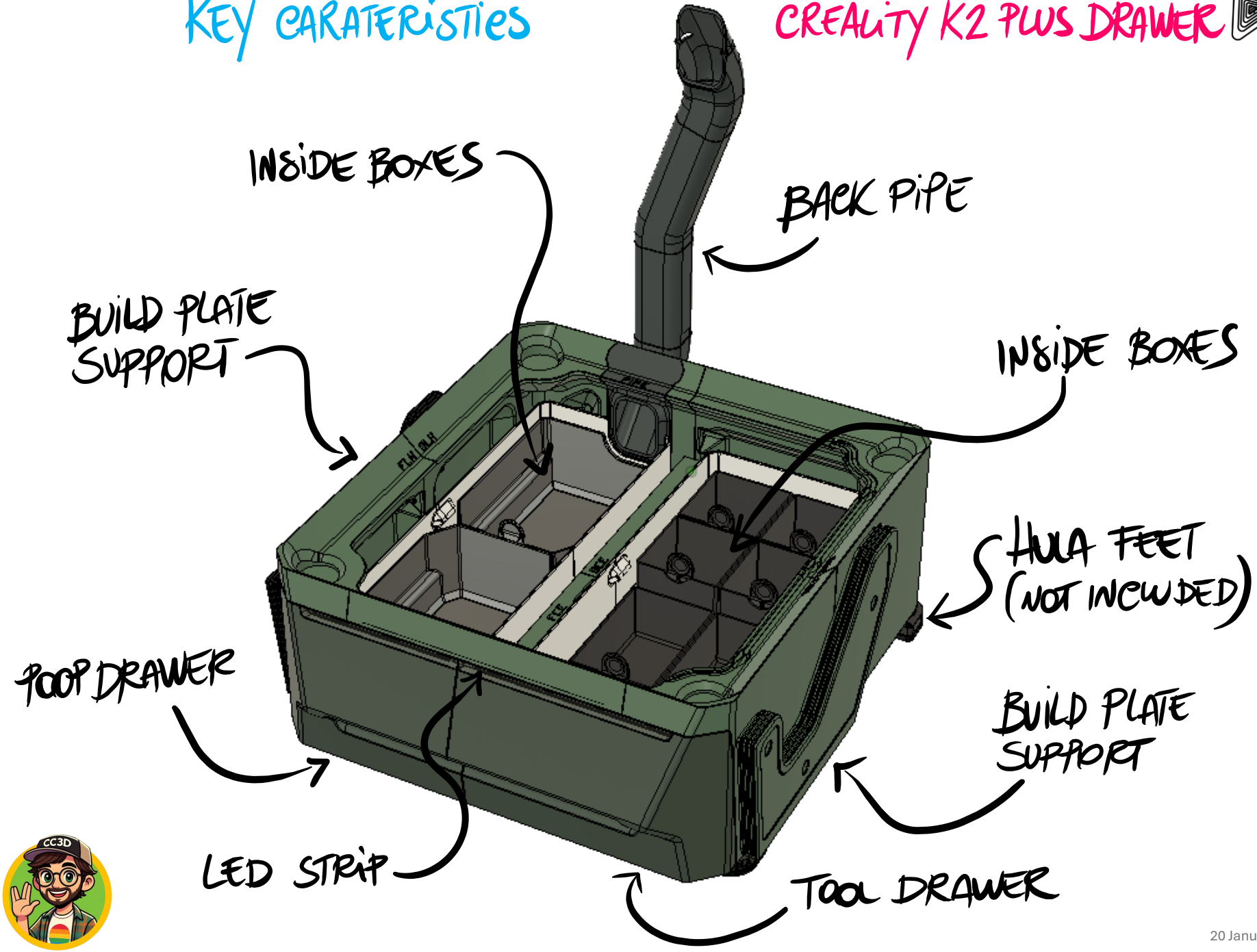

ALL MATERIAL PRODUCED AND PROVIDED HAS BEEN CONCEIVED, AUTHORED AND PRODUCED BY ENRICO MAZZAROL - ALL RIGHTS RESERVED.

KEY CARATERISTICS

CREALITY K2 PLUS DRAWER

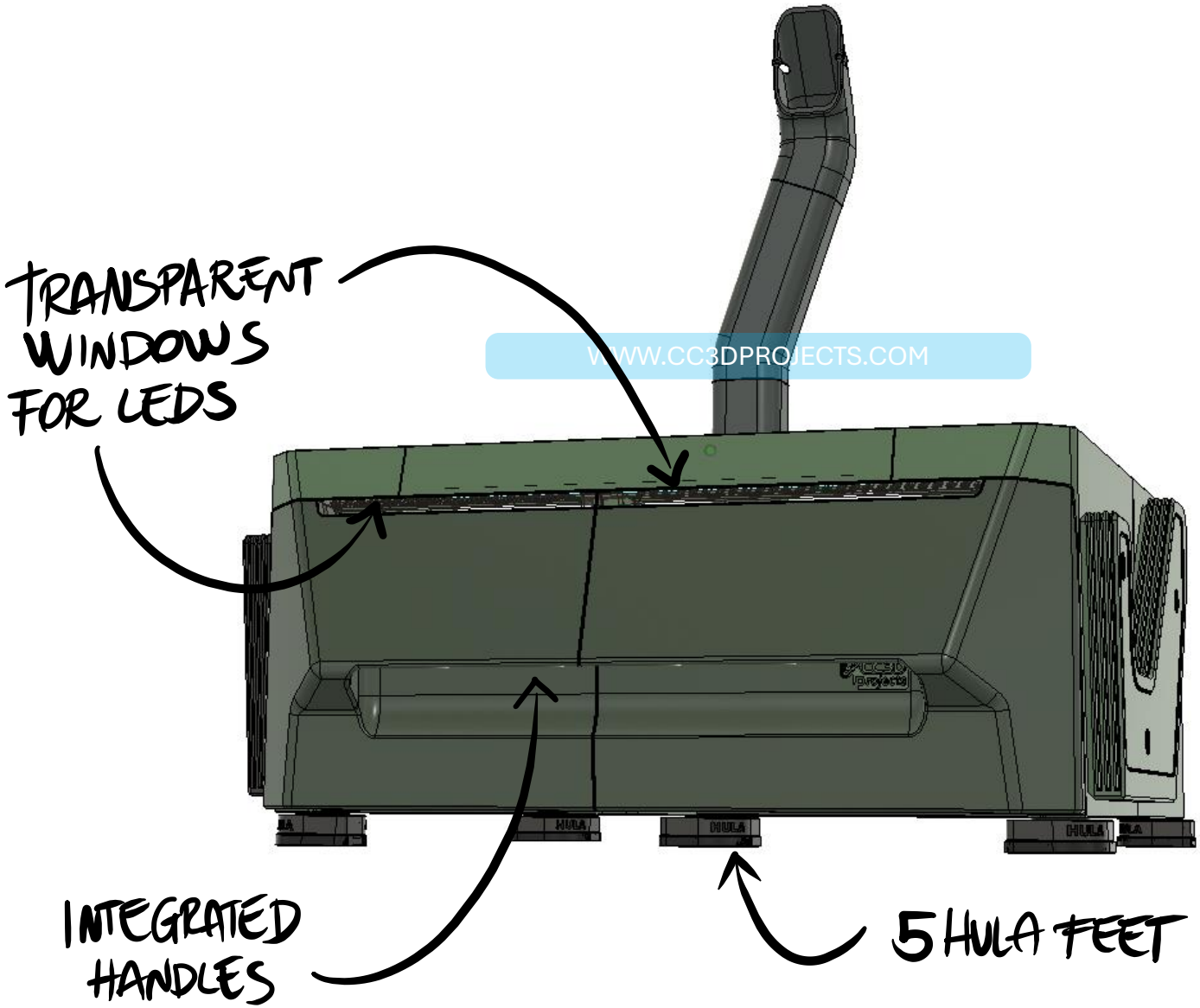

WWW.CC3DPROJECTS.COM

ALL MATERIAL PRODUCED AND PROVIDED HAS BEEN CONCEIVED, AUTHORED AND PRODUCED BY ENRICO MAZZAROL - ALL RIGHTS RESERVED.

KEY CARATERISTICS

CREALITY K2 PLUS DRAWER

TWO DIFFERENT TOOL DRAWERS

IF YOU PREFER GRIDFINITY (FREE OPTION), YOU CAN USE THE INCLUDED BOXES OR YOU CAN DESIGN YOUR OWN DOWNLOADING FROM FREE PLATFORMS OR USING THE GRIDFINITY ONLINE CONFIGURATOR

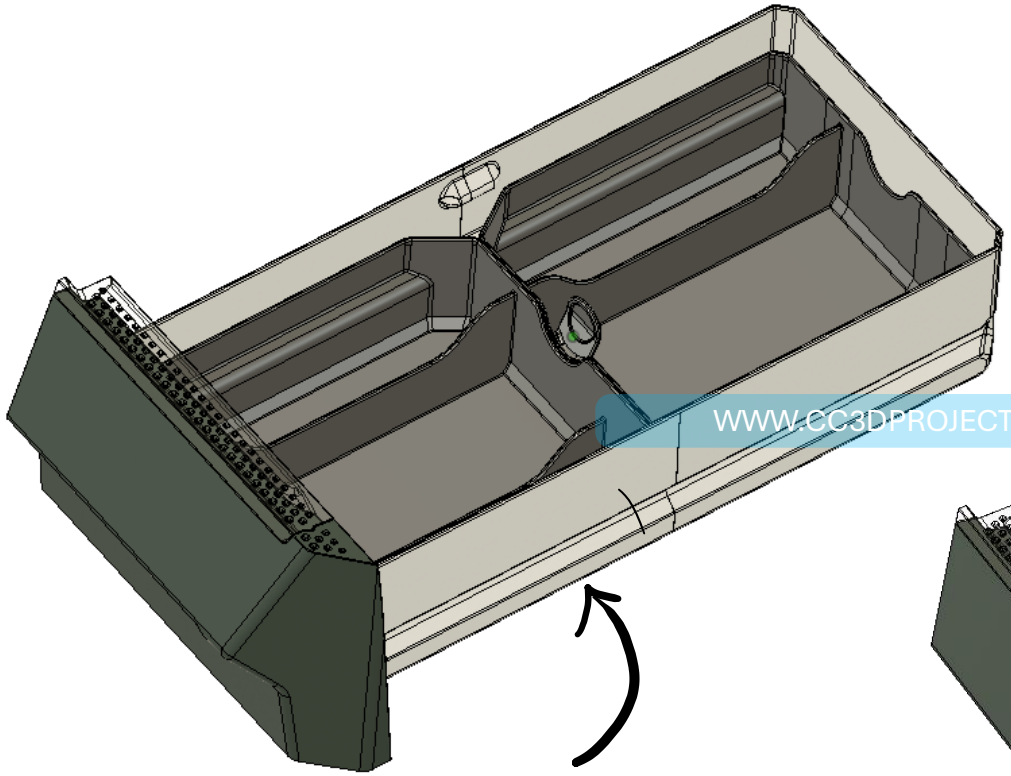

WWW.CC3DPROJECTS.COM

WITH CUSTOM BOXES INCLUDED IN THE PRINT FILE

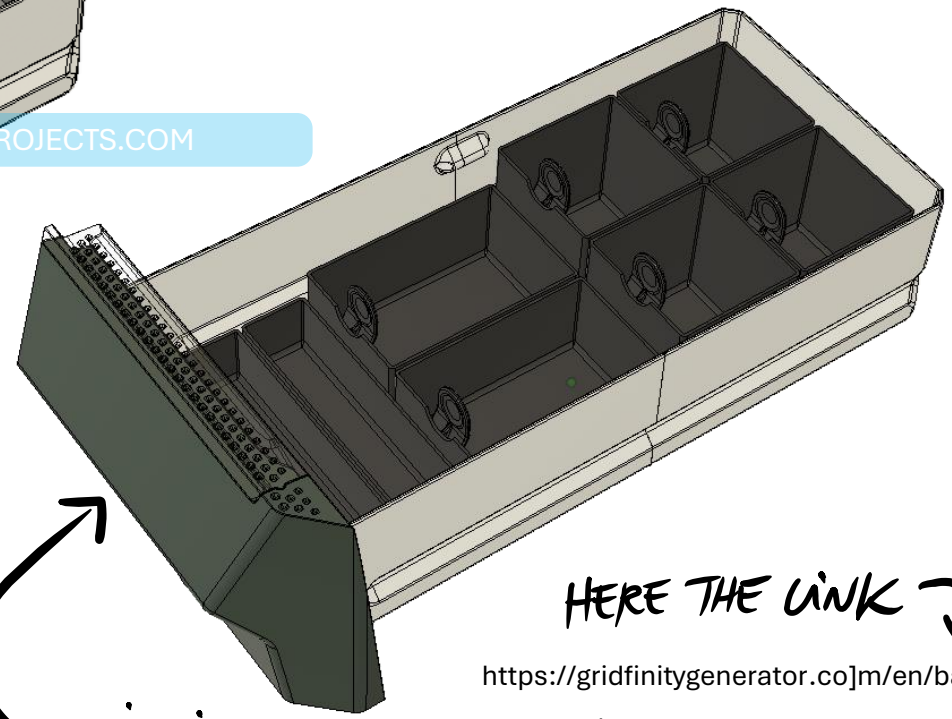

HERE THE LINK

https://gridfinitygenerator.co]m/en/baseplate

WITH GRIDFINITY SYSTEM 42 mm

GRIDFINITY SYSTEM 42 M (FREE OPTION IN SHOP)

ALL MATERIAL PRODUCED AND PROVIDED HAS BEEN CONCEIVED, AUTHORED AND PRODUCED BY ENRICO MAZZAROL - ALL RIGHTS RESERVED.

KEY CARATERISTICS

CREALITY K2 PLUS DRAWER

THE DRAWER FRONTS HAVE A CLEAR TOP SECTION AS YOU SEE INSIDE THERE IS A SPACE TO ADD AN LED STRIP WHICH LIGHTS UP BOTH DRAWERS AN THE FRONTS

LED STRIP

CLEAR SECION

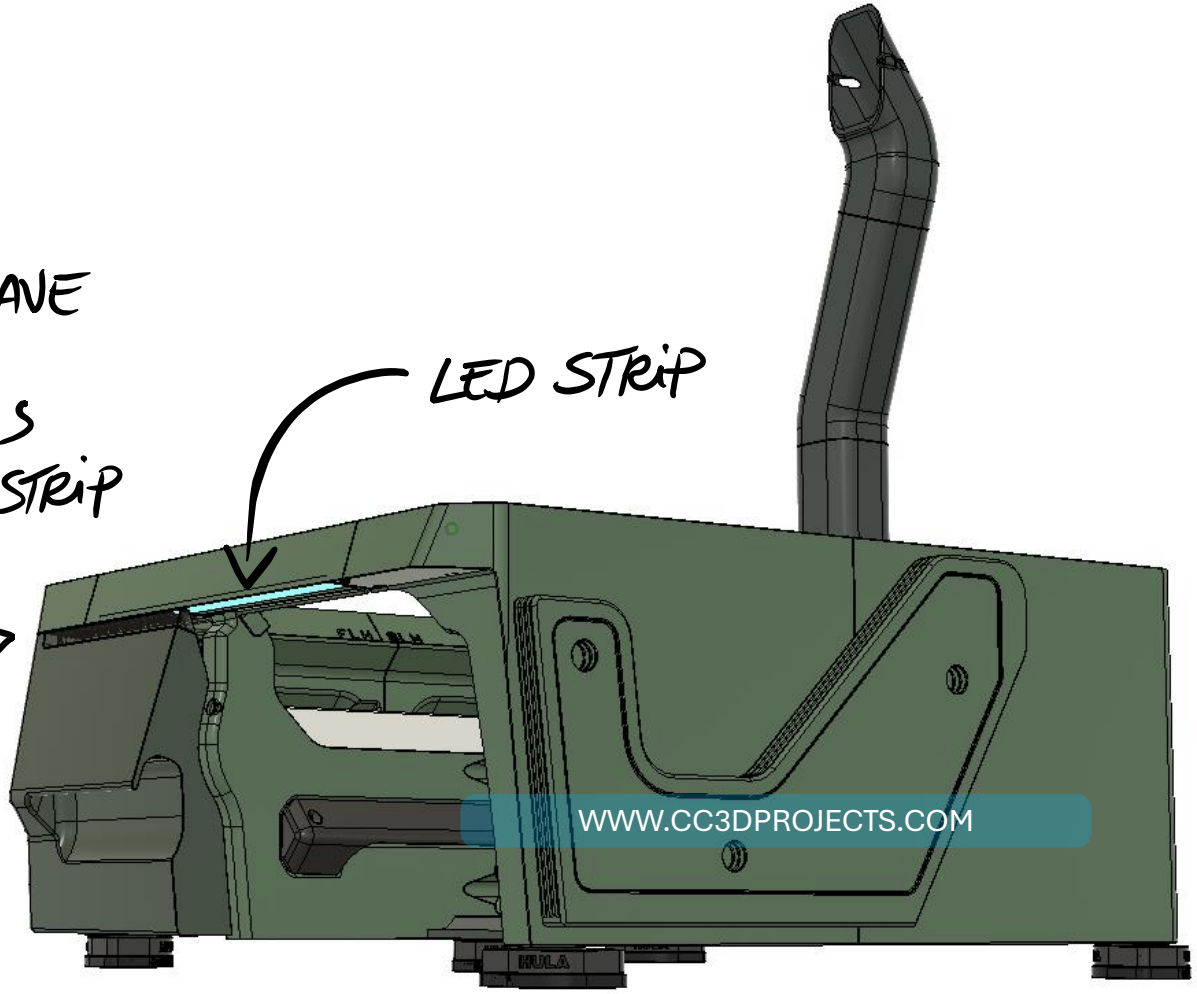

ALL MATERIAL PRODUCED AND PROVIDED HAS BEEN CONCEIVED, AUTHORED AND PRODUCED BY ENRICO MAZZAROL - ALL RIGHTS RESERVED.

MATERIALS & HARDWARE

B.O.M.

CREALITY K2 PLUS DRAWER

CC3D Projects

MAIN BODY + PIPE + POOP DRAWER

PETG	PETG	PETG	TRANSPARENT PETG
2.7KG	1.5KG	440G	23G

PRINT TIME
4D 19H 23M

OR

STANDARD TOOL DRAWER

PETG	PETG	PETG	TRANSPARENT PETG
270G	590G	520G	30G

PRINT TIME
1D 9H 19M

GRIDFINITY TOOL DRAWER

PETG	PETG	PETG	TRANSPARENT PETG
294G	580G	780G	32G

PRINT TIME
1D 17H 14M

REQUIRED HARDWARE:

SCREW M14 x 14mm — 45 UNITS

MAGNET 8x2 mm — 4 UNITS

LED STRIP — 1 UNIT

HULA FEET (BAMBU LAB X1C-SPEC.) — 5 UNITS

— OR —

SILICONE FEET — 9 UNITS

ALL MATERIAL PRODUCED AND PROVIDED HAS BEEN CONCEIVED, AUTHORED AND PRODUCED BY ENRICO MAZZAROL - ALL RIGHTS RESERVED.

TIPS 4 FLAWESS PRINTS

CREALITY K2 PLUS DRAWER

CC3D Projects

FOLLOW THESE SIMPLE TIPS AND YOU'RE GOLDEN:

🎨 **1. STICK WITH REGULAR PETG**
USE STANDARD PETG, AND SKIP THE HIGH FLOW (HF) STUFF.HF MIGHT SOUND COOL, BUT IT CAN'T HANDLE HEAT AS WELL, AND THAT CAN MESS WITH YOUR PRINT'S DURABILITY.YEAH, REGULAR PETG IS SHINIER — I GET IT — BUT HERE'S A TRICK: SPRAY IT WITH A MATTE CLEAR COAT LIKE I DID. BOOM! PROBLEM SOLVED.

🚫 **2. DON'T USE PLA FOR SUPPORTSA**
IF YOU ARE USING A SINGLE NOZZLE PRINTER WITH A COLOR CHANGE SYSTEM, VOID USING PLA AS SUPPORT MATERIAL. SERIOUSLY.EVEN IF YOU SWITCH FILAMENTS, LEFTOVER PLA IN THE NOZZLE CAN MESS WITH LAYER ADHESION, AND THAT'S NO FUN.AND DON'T STRESS — THE SUPPORTS COME OFF EASY, I PROMISE. **YOU GOT THIS.**

🐢 **3. KEEP IT SLOW AND STEADY**
RESIST THE URGE TO CRANK UP THE PRINT SPEED.GOING TOO FAST CAN LEAD TO WEIRD-LOOKING CORNERS AND WARPED PARTS.STICK TO STANDARD SPEED — YOUR PRINT WILL THANK YOU.

WWW.CC3DPROJECTS.COM

🧲 **4. USE A GRIPPY PRINT BED**
THESE PARTS ARE ON THE BIGGER SIDE, SO BED ADHESION IS EVERYTHING.MAKE SURE YOUR BUILD PLATE'S GOT A GOOD GRIP TO AVOID WARPING OR LIFTING. TRUST ME, A SOLID FIRST LAYER MAKES ALL THE DIFFERENCE.

SLICER PRINT SETTINGS:

WALL LOOPS = 2
TOP SHELL = 2
BOTTOM SHELL = 2

SPARSE INFILL = 8 %
INFILL PATTERN = GYROID
SUPPORT TYPE = TREE OR NORMAL/MIXED

(PERIMETERS, INFILL AND SUPPORTS MIGHT VARY, DIFFERENT PARTS = DIFFERENT STRENGTH HOWEVER, ALL THE PROPER CONFIGURATIONS SHOULD BE INCLUDED IN THE PRINT FILE!)

ALL MATERIAL PRODUCED AND PROVIDED HAS BEEN CONCEIVED, AUTHORED AND PRODUCED BY ENRICO MAZZAROL - ALL RIGHTS RESERVED.

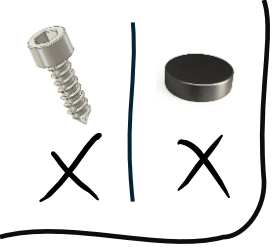

FRAME ASSEMBLY

CREALITY K2 PLUS DRAWER

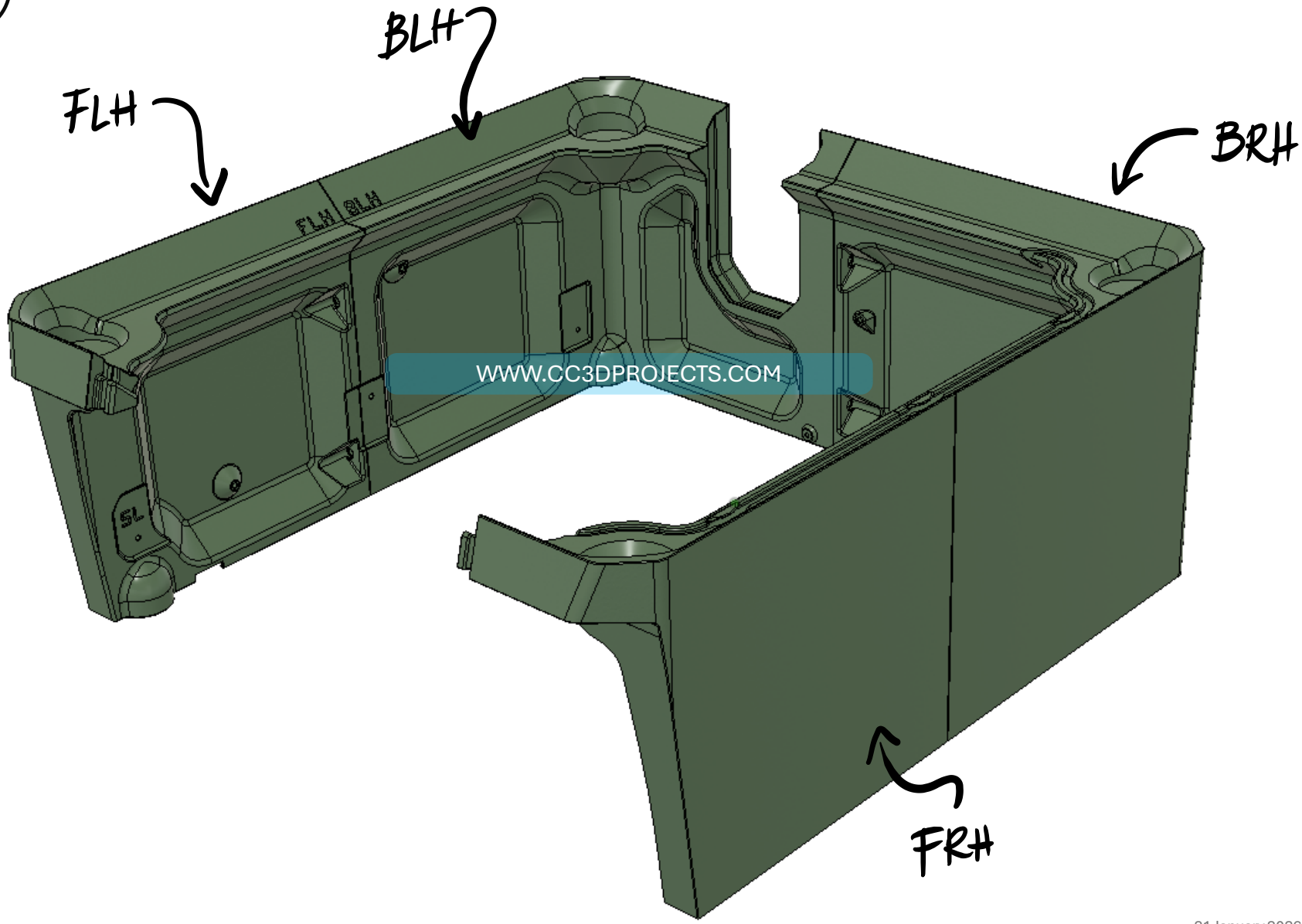

WWW.CC3DPROJECTS.COM

ALL MATERIAL PRODUCED AND PROVIDED HAS BEEN CONCEIVED, AUTHORED AND PRODUCED BY ENRICO MAZZAROL - ALL RIGHTS RESERVED.

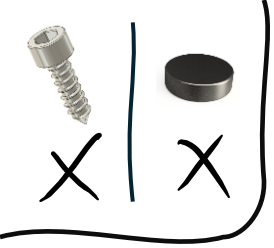

FRAME ASSEMBLY

SEE THE TWO HIGHLIGHTED HOLES?
IF YOU WANT TO MOUNT THE BUILD PLATE HOLDER ON THAT SIDE, YOU'LL NEED TO PRE-DRILL THEM WITH 3 mm BIT.
AND OF COURSE, YOU SHOULD DO THE SAME ON THE OTHER SIDE!

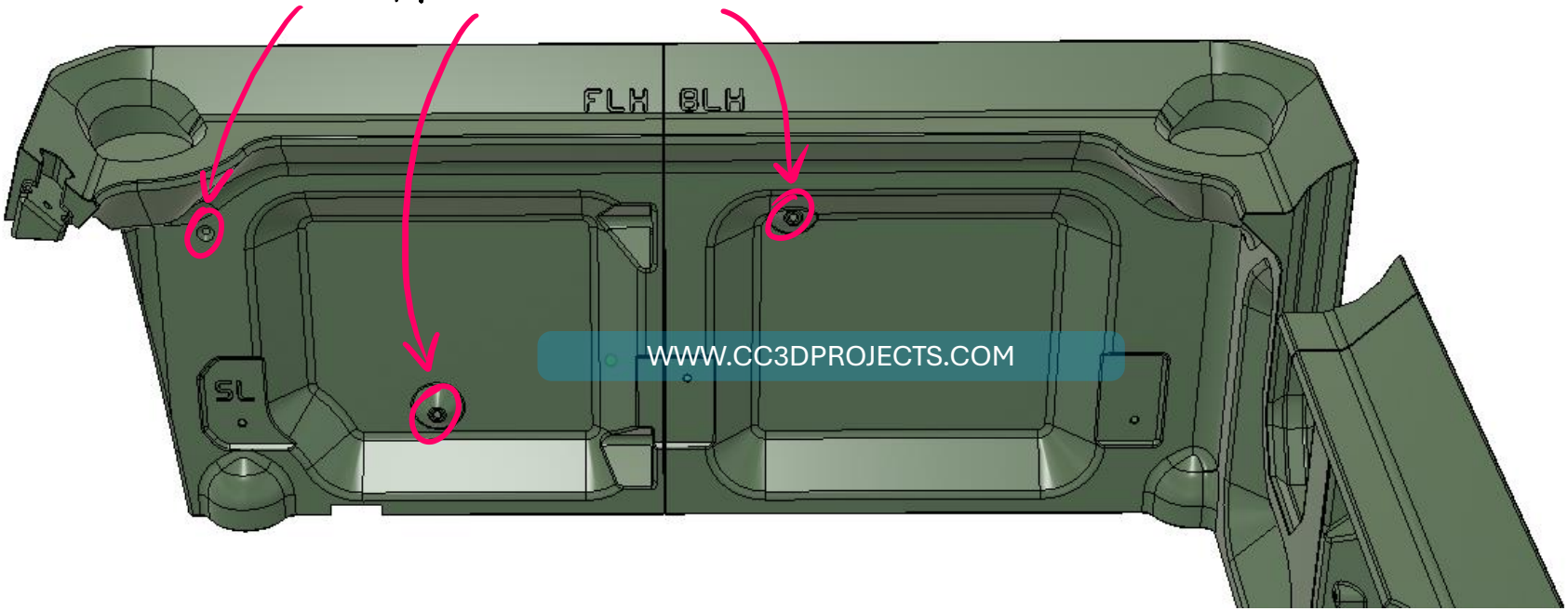

ALL MATERIAL PRODUCED AND PROVIDED HAS BEEN CONCEIVED, AUTHORED AND PRODUCED BY ENRICO MAZZAROL - ALL RIGHTS RESERVED.

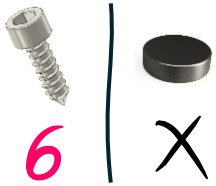

FRAME ASSEMBLY

ASSEMBLE THE PARTS BY INSERTING AND TIGHTENING THE SCREWS IN THE HOLES MARKED IN RED.

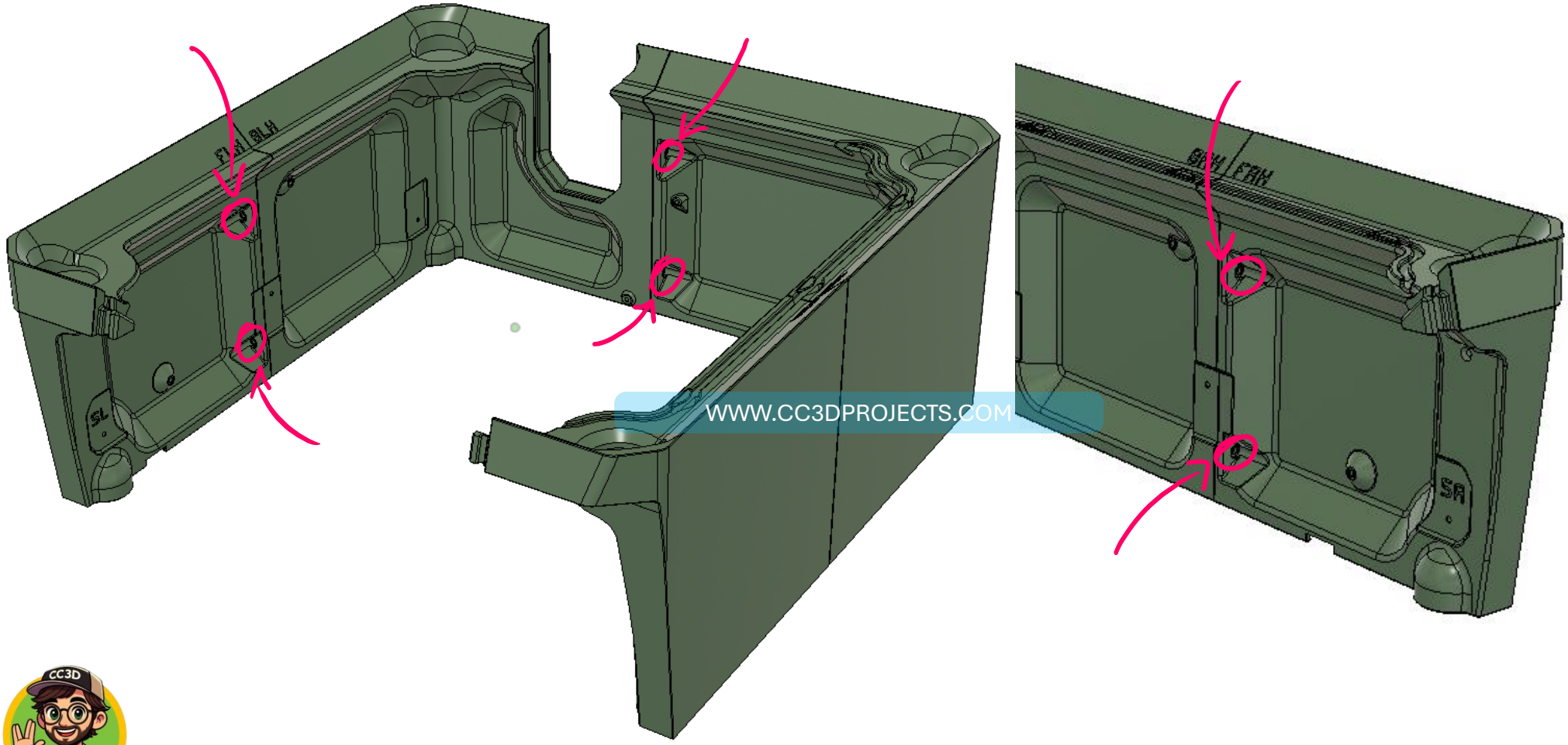

WWW.CC3DPROJECTS.COM

ALL MATERIAL PRODUCED AND PROVIDED HAS BEEN CONCEIVED, AUTHORED AND PRODUCED BY ENRICO MAZZAROL - ALL RIGHTS RESERVED.

4 | X

FRAME ASSEMBLY

CREALITY K2 PLUS DRAWER

CC3D Projects

INSTALL THE CENTER PIECES WITH SCREW
USING THE RED MARKED HOLES

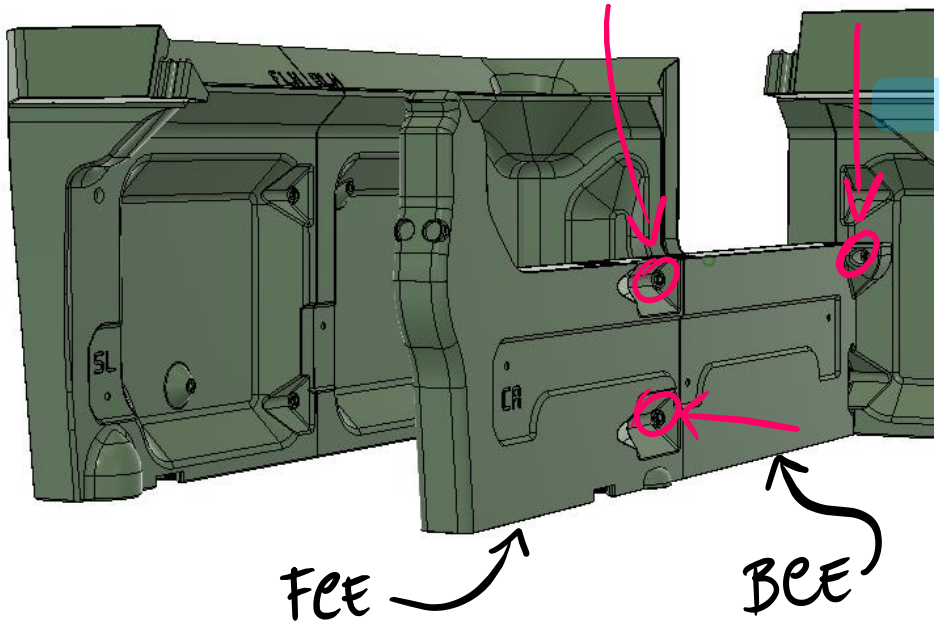

WWW.CC3DPROJECTS.COM

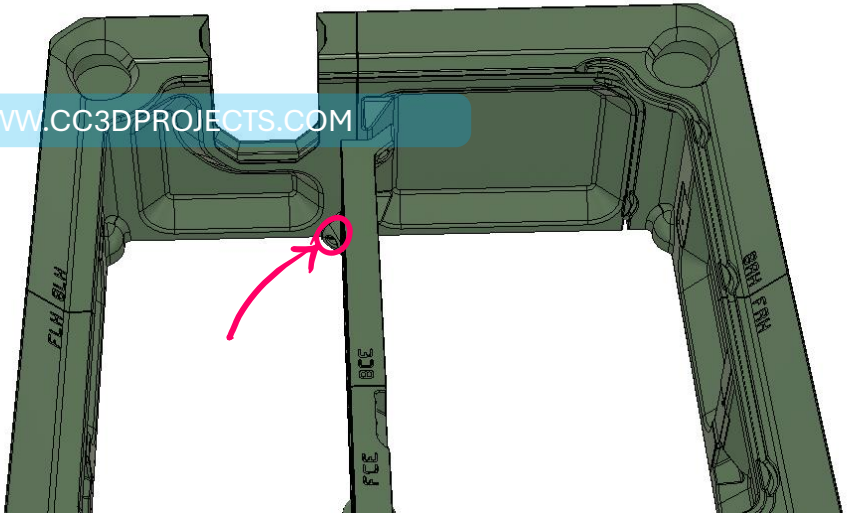

ALL MATERIAL PRODUCED AND PROVIDED HAS BEEN CONCEIVED, AUTHORED AND PRODUCED BY ENRICO MAZZAROL - ALL RIGHTS RESERVED.

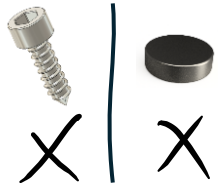

FRAME ASSEMBLY

LET'S INSTALL THE BOTTOM DRAWER REINFORCEMENTS.

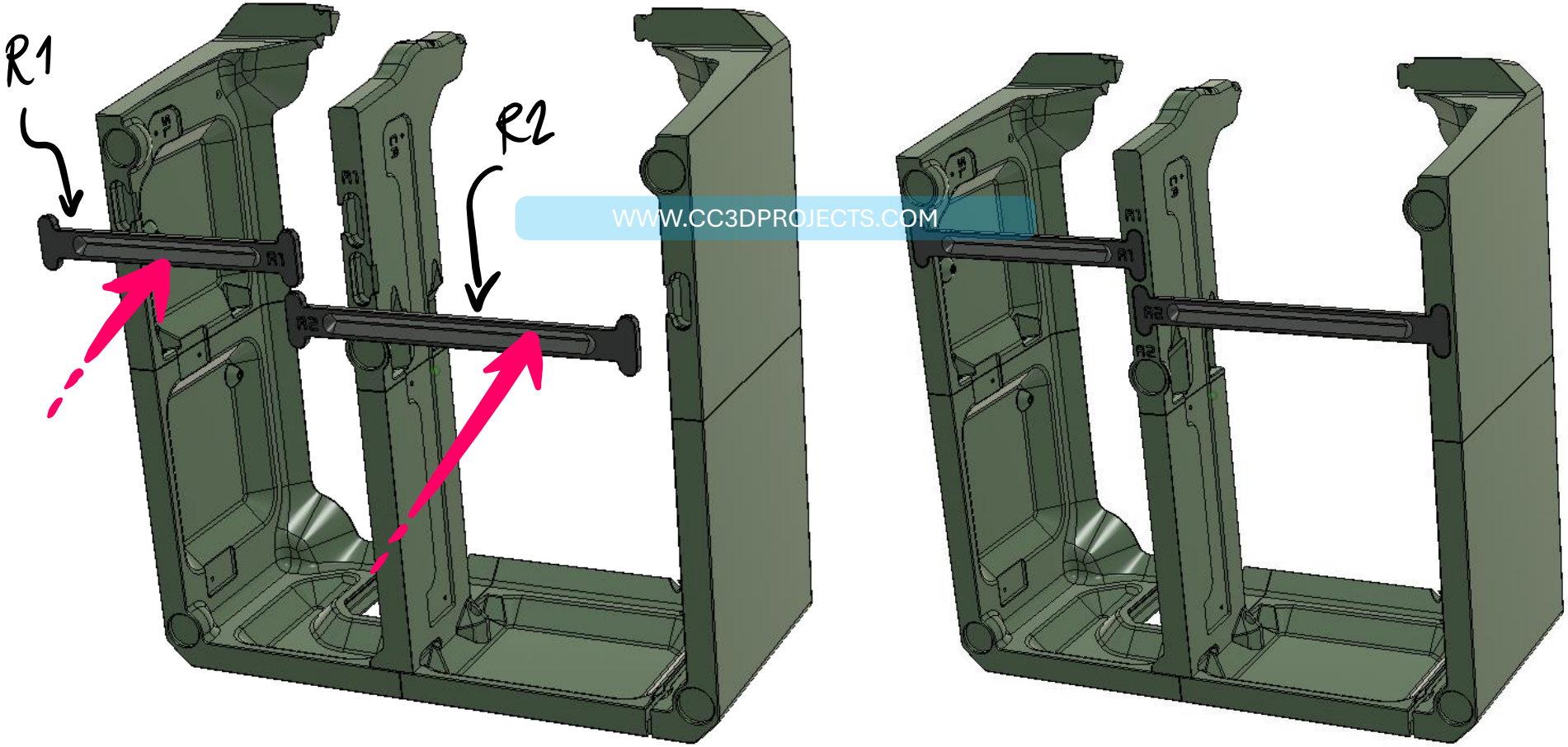

WWW.CC3DPROJECTS.COM

THEY WITH A PRESS FIT – IF NEEDED, GIVE THEM A LIGHT TAP.
THEY SNAP IN PLACE AND DON'T REQUIRE GLUE.

ALL MATERIAL PRODUCED AND PROVIDED HAS BEEN CONCEIVED, AUTHORED AND PRODUCED BY ENRICO MAZZAROL - ALL RIGHTS RESERVED.

LET'S INSTALL THE FRONT BRIDGE

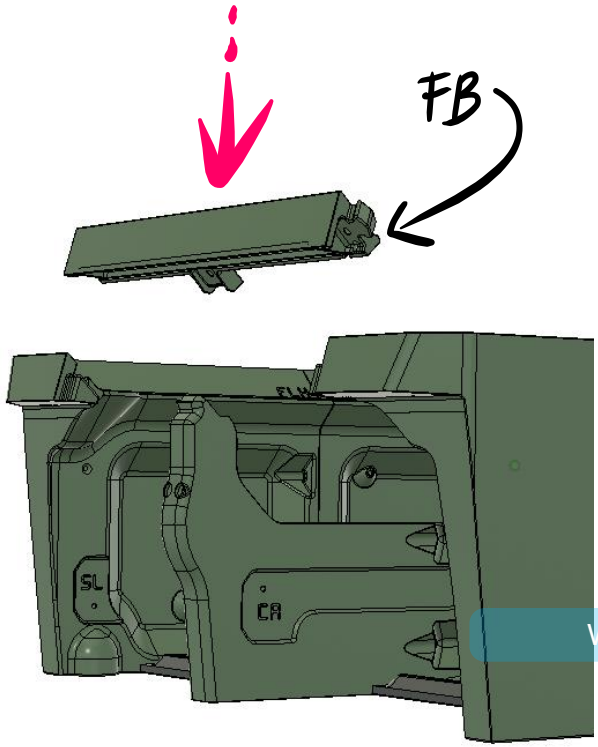

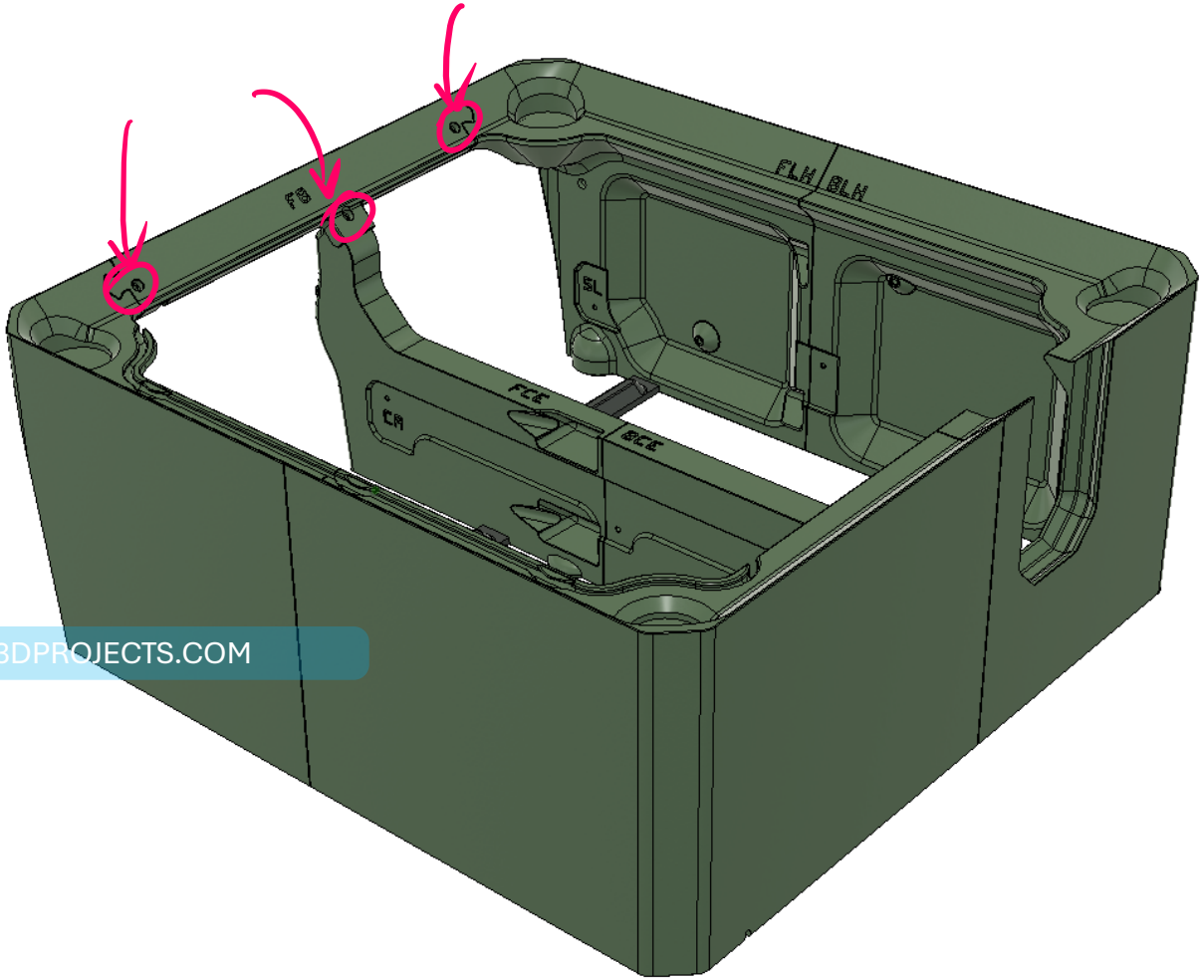

WWW.CC3DPROJECTS.COM

SLOT THE PIECES TOGETHER AND SECURE THEM WITH SCREWS USING THE HOLES MARKED IN RED.

ALL MATERIAL PRODUCED AND PROVIDED HAS BEEN CONCEIVED, AUTHORED AND PRODUCED BY ENRICO MAZZAROL - ALL RIGHTS RESERVED.

X | 2

FRAME ASSEMBLY

LET'S INSTALL THE DRAWER MAGNETS ON THE FRONT.

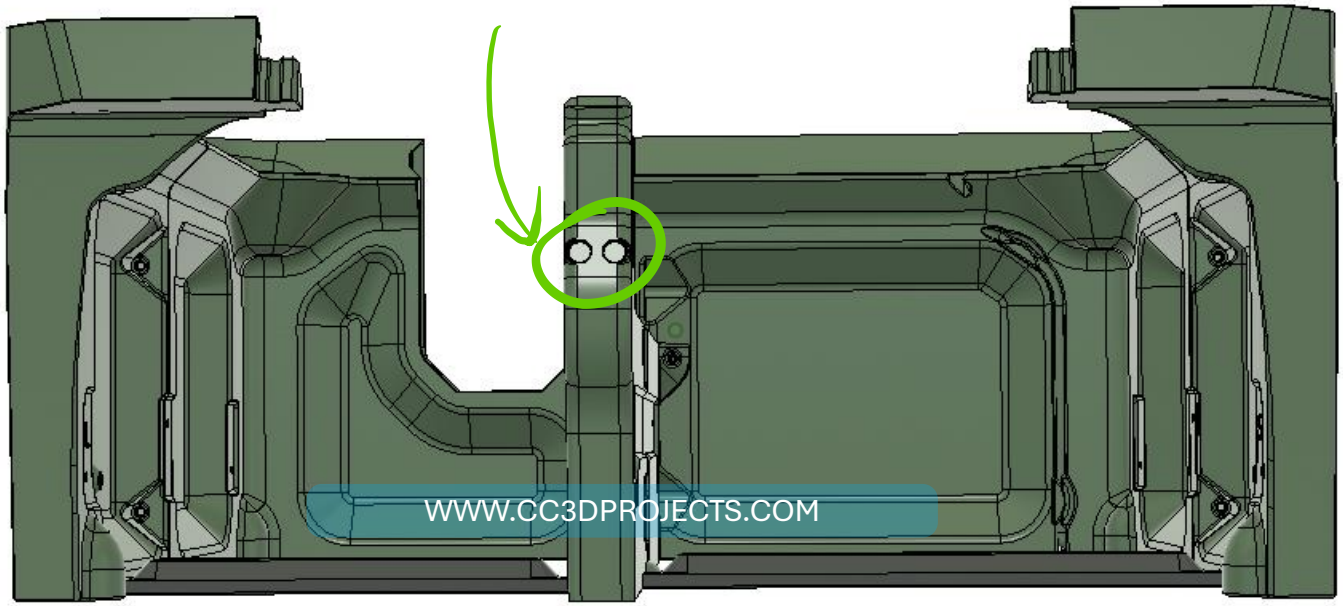

TO INSTALL THOSE MAGNETS USE THE MAGNET INSTALLER "A".
YOU'LL FIND THE MAGNET INSTALLER FOR FREE ON MY SHOP!

ALL MATERIAL PRODUCED AND PROVIDED HAS BEEN CONCEIVED, AUTHORED AND PRODUCED BY ENRICO MAZZAROL - ALL RIGHTS RESERVED.

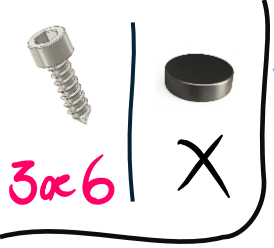

PLATE HOLDER ASSEMBLY

CREALITY K2 PLUS DRAWER

BEFORE SLIDING THE DRAWERS IN, IT'S TIME TO INSTALL THE PLATE HOLDER(S) ON THE SIDE OR SIDES YOU'VE SELECTED.

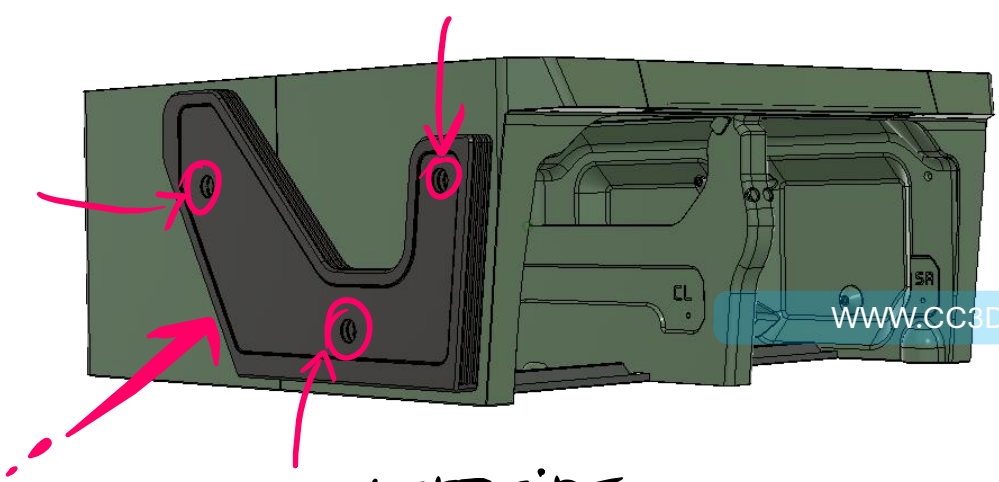

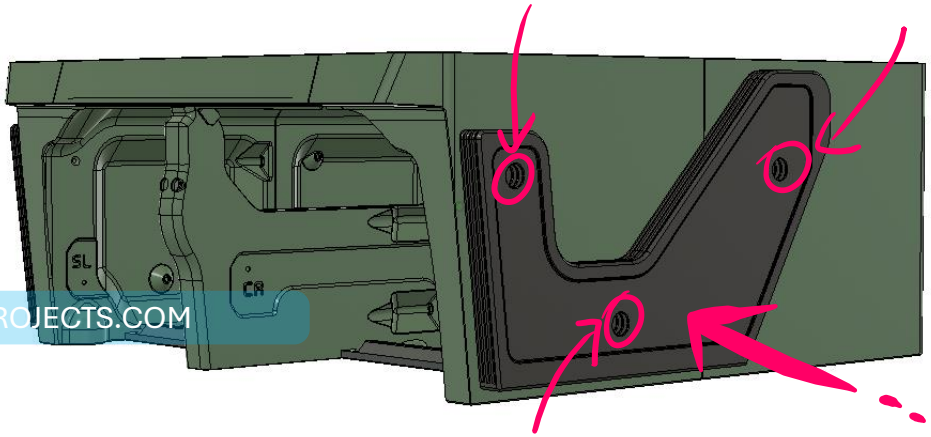

WWW.CC3DPROJECTS.COM

LEFT SIDE

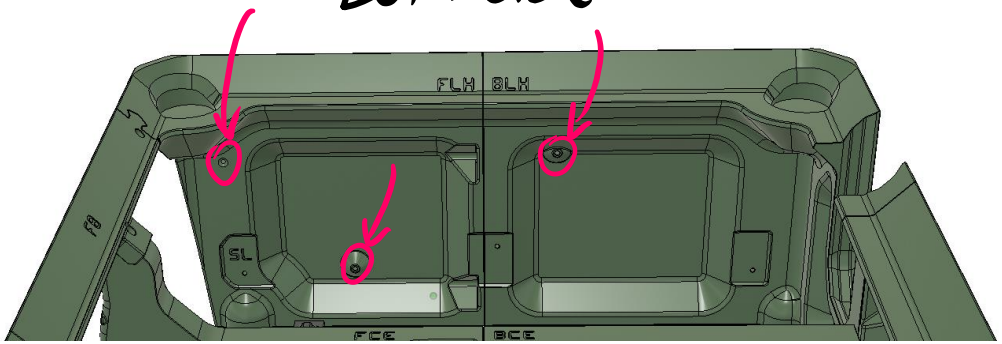

RIGHT SIDE

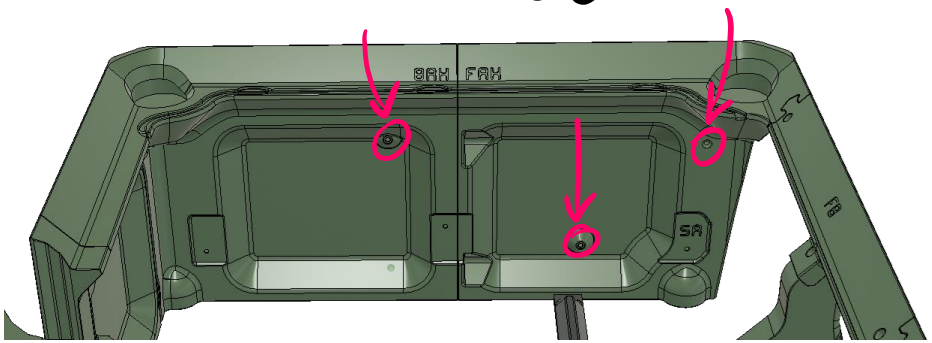

BRING THE PLATE HOLDER UP TO THE UNIT AND SECURE IT WITH THE SCREWS, INSERTING THEM INTO THE RED MARKED HOLES

ALL MATERIAL PRODUCED AND PROVIDED HAS BEEN CONCEIVED, AUTHORED AND PRODUCED BY ENRICO MAZZAROL - ALL RIGHTS RESERVED.

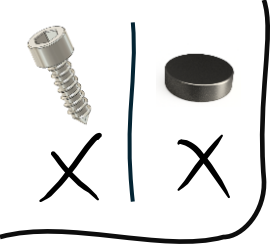

LED INSTALLATION

THE LED STRIP INSTALLATION SHOULD BE QUITE SIMPLE

RECESS

I'VE INCLUDED A PLACE TO GLUE THE STRIP INTO.

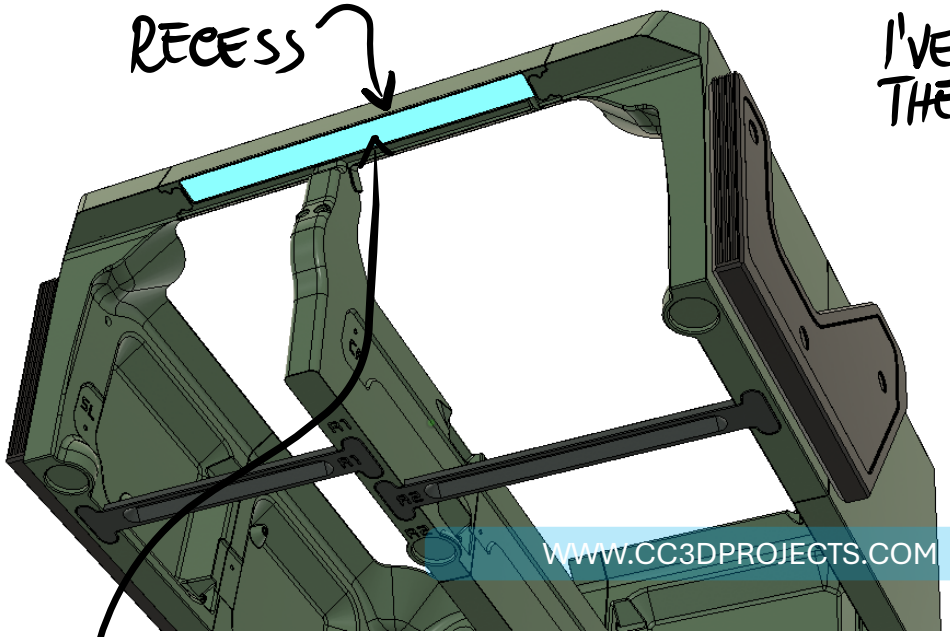

WWW.CC3DPROJECTS.COM

HERE YOU CAN PLACE YOUR LED STRIP.

LED CABLE PATH!

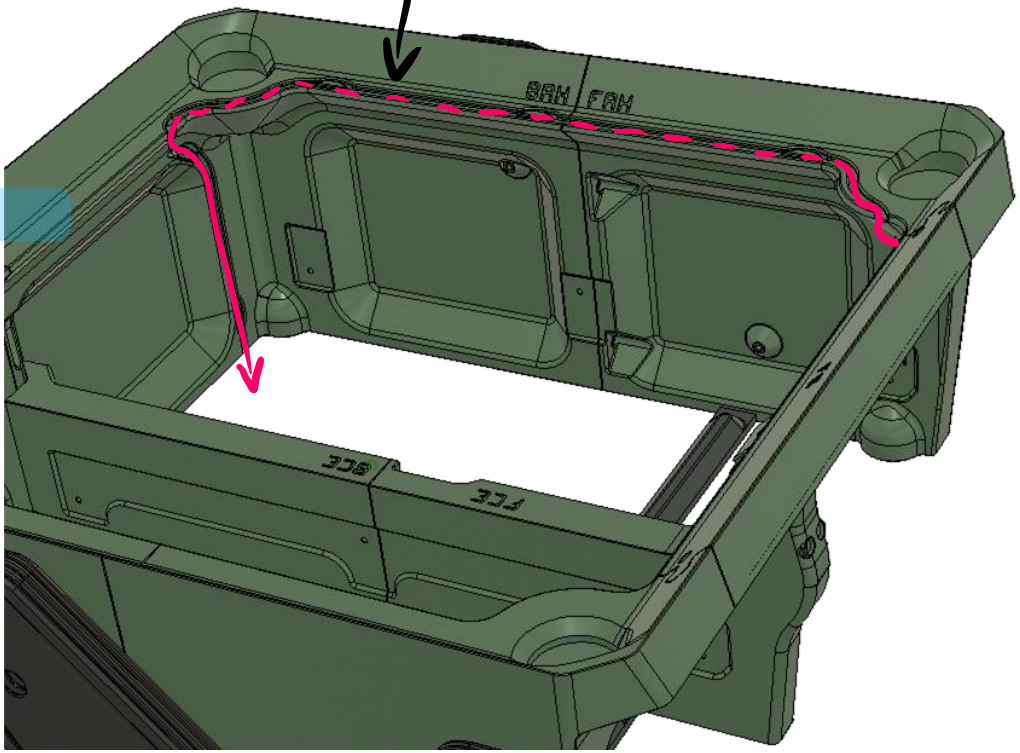

ALL MATERIAL PRODUCED AND PROVIDED HAS BEEN CONCEIVED, AUTHORED AND PRODUCED BY ENRICO MAZZAROL - ALL RIGHTS RESERVED.

8 | X

DRAWERS ASSEMBLY

CREALITY K2 PLUS DRAWER

CC3D Projects

CHOOSE THIS OR THIS

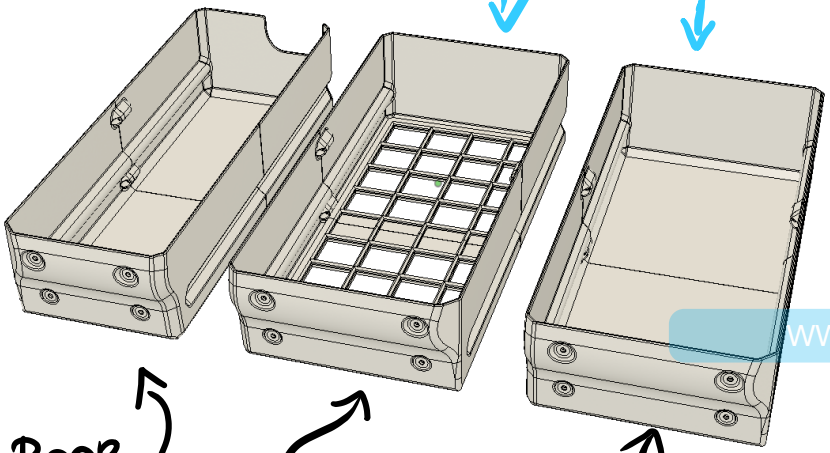

POOP DRAWER

GRIDFINITY TOOL DRAWER *(FREE OPTION ON MY SHOP)

STANDARD TOOL DRAWER

ASSEMBLE THEM WITH THE SCREWS IN THE HOLES MARKED IN RED

OR

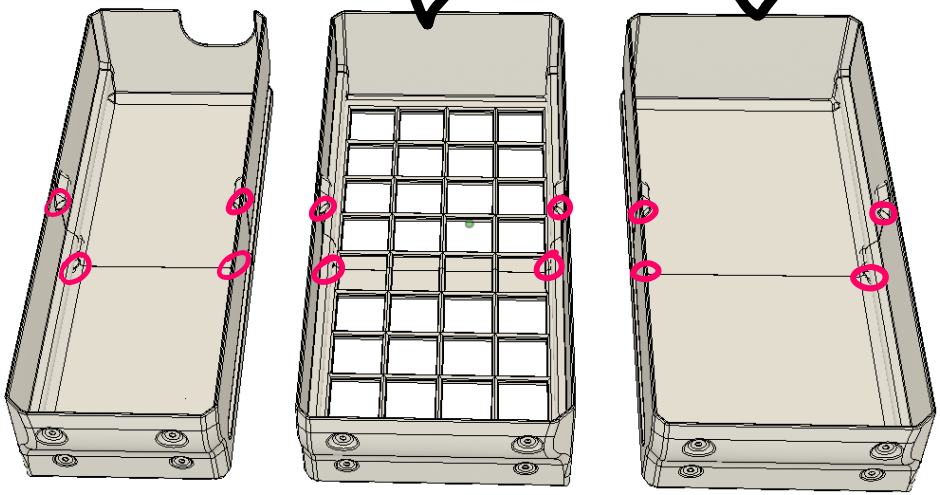

WWW.CC3DPROJECTS.COM

ALL MATERIAL PRODUCED AND PROVIDED HAS BEEN CONCEIVED, AUTHORED AND PRODUCED BY ENRICO MAZZAROL - ALL RIGHTS RESERVED.

AS FOR THE FRONT PANELS, THERE ARE TWO OPTION:

- IF YOU OWN THE MULTI MATERIAL SYSTEM, YOU CAN PRINT THEM IN ONE PIECE, EASY!
- IF YOU DON'T, YOU NEED TO PRINT THE PARTS SEPARATELY, LEAVING THE LOGO UNCOLORED, AN GLUE THE PIECES TOGETHER.

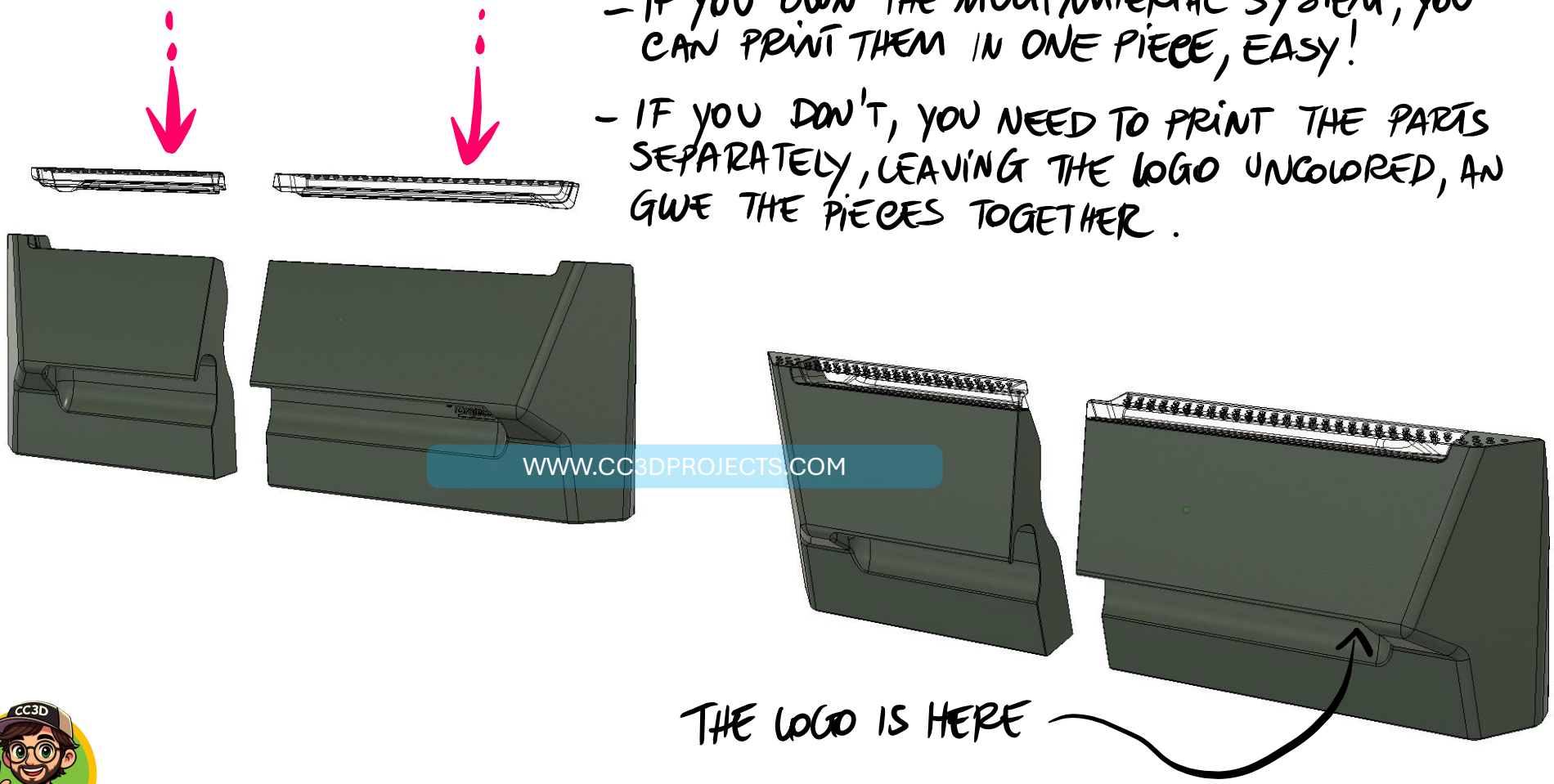

WWW.CC3DPROJECTS.COM

ALL MATERIAL PRODUCED AND PROVIDED HAS BEEN CONCEIVED, AUTHORED AND PRODUCED BY ENRICO MAZZAROL - ALL RIGHTS RESERVED.

DRAWERS ASSEMBLY

CREALITY K2 PLUS DRAWER

CC3D Projects

INSTALL ALSO THE MAGNETS USING THE MAGNET INSTALLER "B".
THE HOLES ARE MARKED IN GREEN.

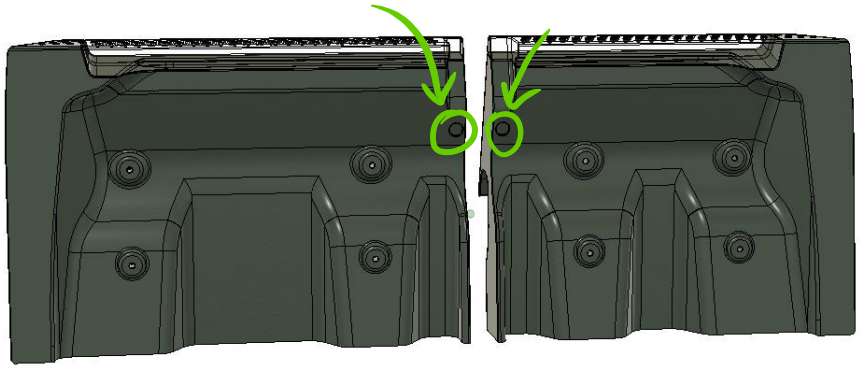

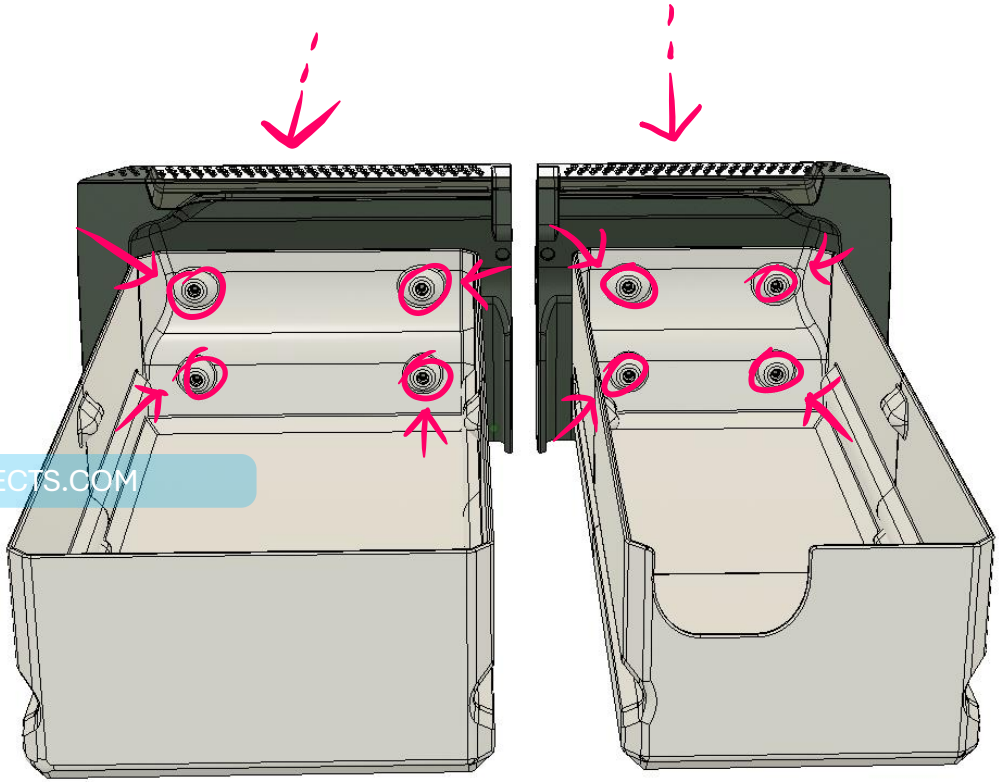

WWW.CC3DPROJECTS.COM

INSTALL THE FRONTS ON THE DRAWER
USING SCREWS INTO THE RED MARKET HOLES

ALL MATERIAL PRODUCED AND PROVIDED HAS BEEN CONCEIVED, AUTHORED AND PRODUCED BY ENRICO MAZZAROL - ALL RIGHTS RESERVED.

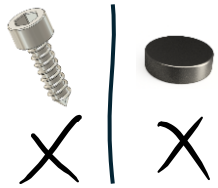

DRAWERS ASSEMBLY

CREALITY K2 PLUS DRAWER

CC3D Projects

STANDARD OPTION:

IF YOU WANT TO USE THE CUSTOM DRAWER, SIMPLY PLACE THE BOXES INSIDE AS SHOWN.

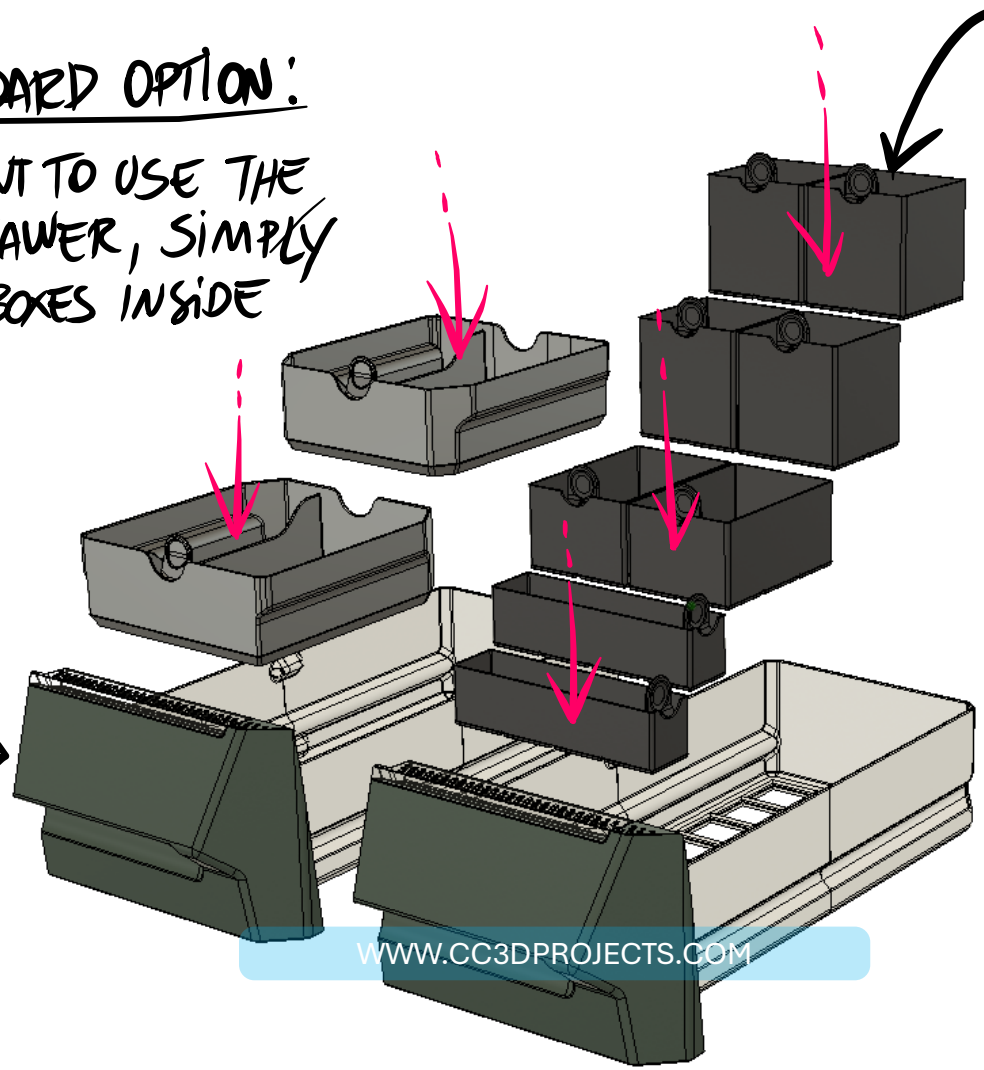

GRIDFINITY OPTION:

IF YOU PREFER GRIDFINITY (FREE OPTION), YOU CAN USE THE INCLUDED BOXES OR YOU CAN DESIGN YOUR OWN DOWNLOADING FROM FREE PLATFORMS OR USING THE GRIDFINITY ONLINE CONFIGURATOR

HERE THE LINK

https://gridfinitygenerator.com/en/baseplate

ALL MATERIAL PRODUCED AND PROVIDED HAS BEEN CONCEIVED, AUTHORED AND PRODUCED BY ENRICO MAZZAROL - ALL RIGHTS RESERVED.

NOW LET'S INSTALL THE DRAWER RAILS.

EACH RAIL HAS A CODE, AND THE MATCHING CODES ARE MARKED ON THE WALLS TO MAKE CORRECT INSTALLATION EASIER.

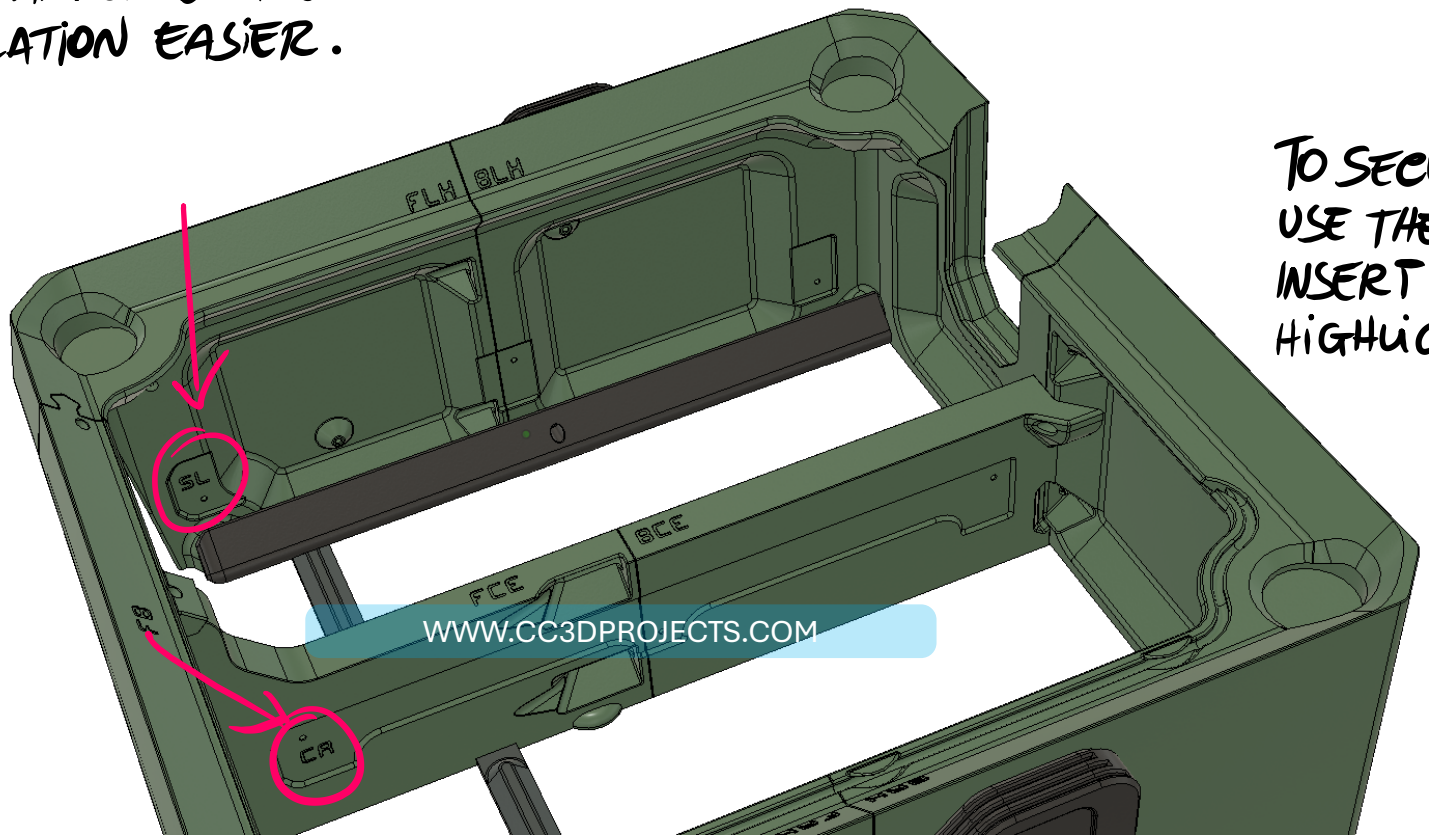

TO SECURE THEM, USE THE SCREWS AND INSERT THEM INTO THE HIGHLIGHTED IN RED.

WWW.CC3DPROJECTS.COM

ALL MATERIAL PRODUCED AND PROVIDED HAS BEEN CONCEIVED, AUTHORED AND PRODUCED BY ENRICO MAZZAROL - ALL RIGHTS RESERVED.

TO SECURE THEM, USE THE SCREWS AND INSERT THEM INTO THE HIGHLIGHTED IN RED.

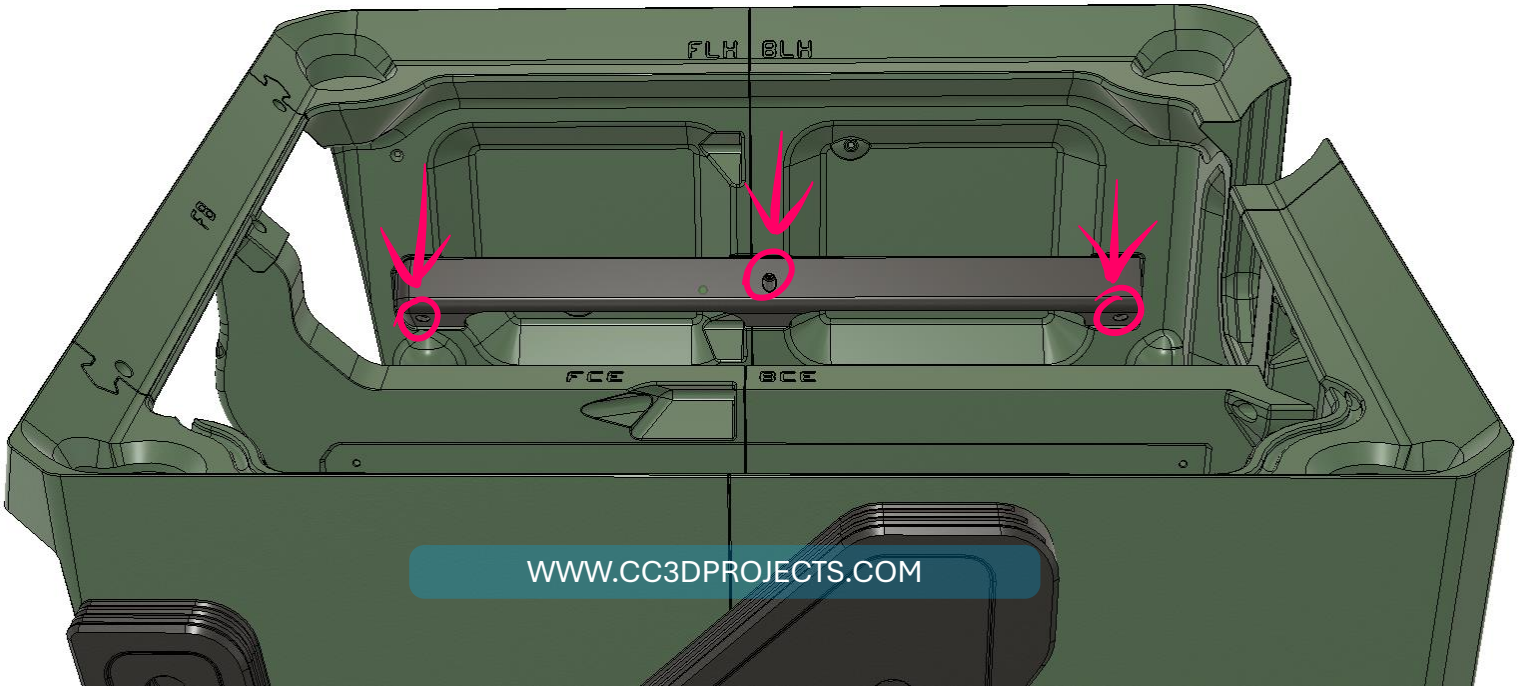

REPEAT THE SAME STEPS FOR EACH RAIL!

ALL MATERIAL PRODUCED AND PROVIDED HAS BEEN CONCEIVED, AUTHORED AND PRODUCED BY ENRICO MAZZAROL - ALL RIGHTS RESERVED.

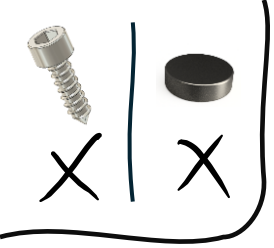

FEET INSTALLATION

CREALITY K2 PLUS DRAWER

CC3D Projects

WHITE FEET SHOULD YOU INSTALL?

ADHESIVE SILICONE HEMISPHERICAL PADS.

THE PRINTER ALREADY COMPENSATE FOR VIBRATIONS IT PRODUCES.

STICK THE PADS ON AS SHOWN.

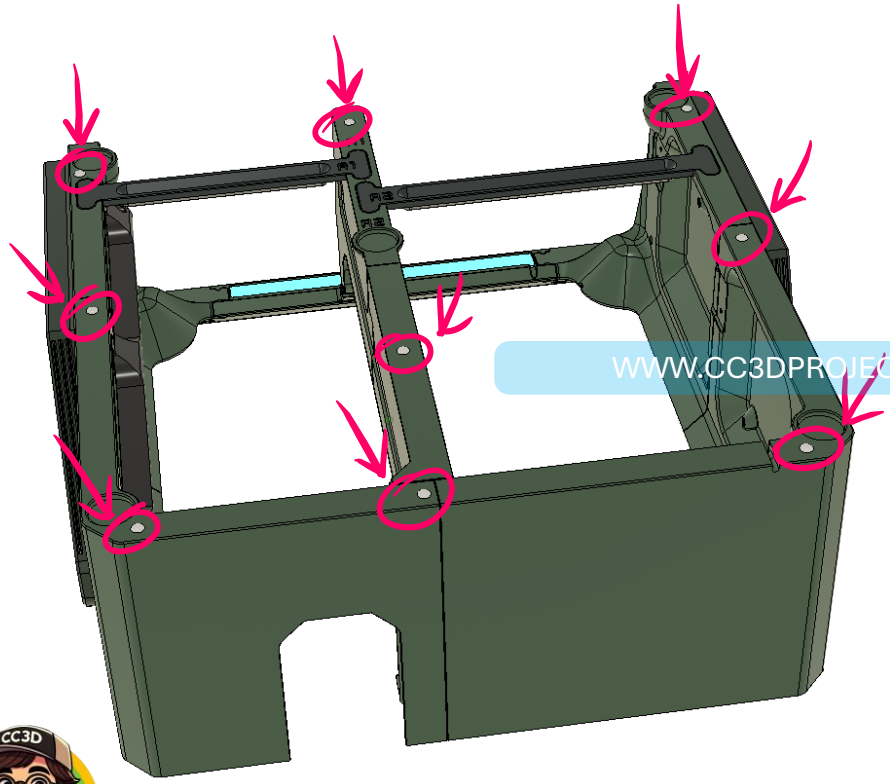

HULA FEET.

THEY ARE USEFULL IF YOU HAVE MORE THE TWO PRINTERS ON THE SAME SURFACE.

I DESIGNED THESE TO USE BAMBU X1C HULA FEET, INSTALL THE HULAS INTO THE HIGHLIGHTED HOLES.

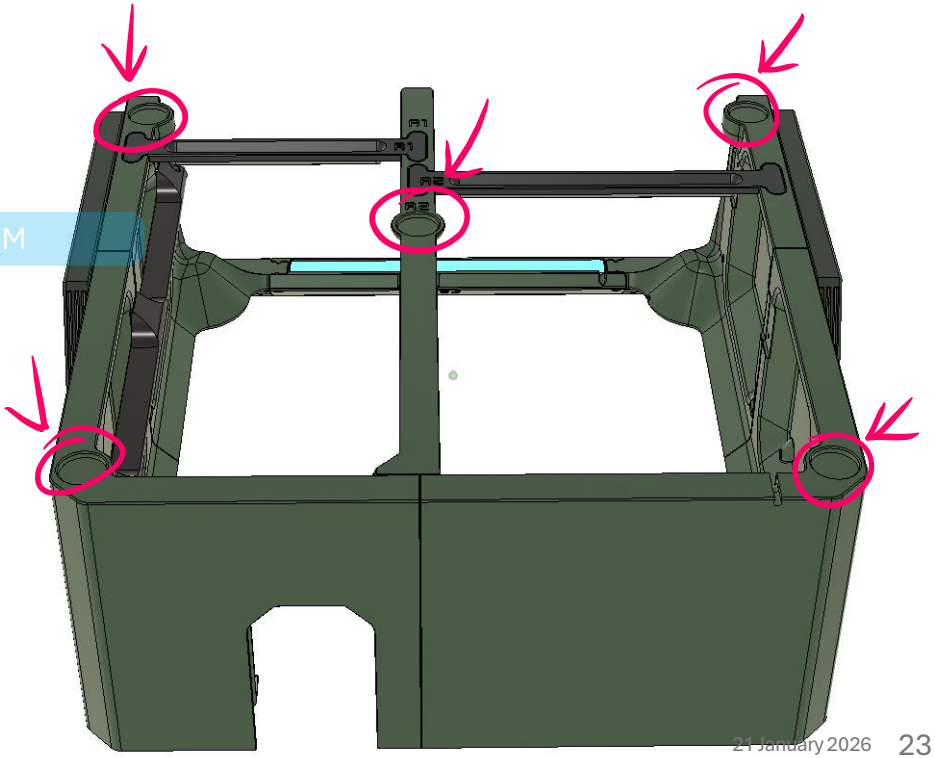

WWW.CC3DPROJECTS.COM

ALL MATERIAL PRODUCED AND PROVIDED HAS BEEN CONCEIVED, AUTHORED AND PRODUCED BY ENRICO MAZZAROL - ALL RIGHTS RESERVED.

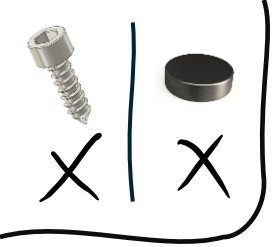

DRAWERS INSTALLATION

CREALITY K2 PLUS DRAWER

CC3D Projects

SLIDE THE DRAWERS IN!

IF THE DRAWERS DO NOT SLIDE SMOOTHLY, FIRST CHECK THAT THE RAILS ARE ALIGNED WITH THE WALLS.

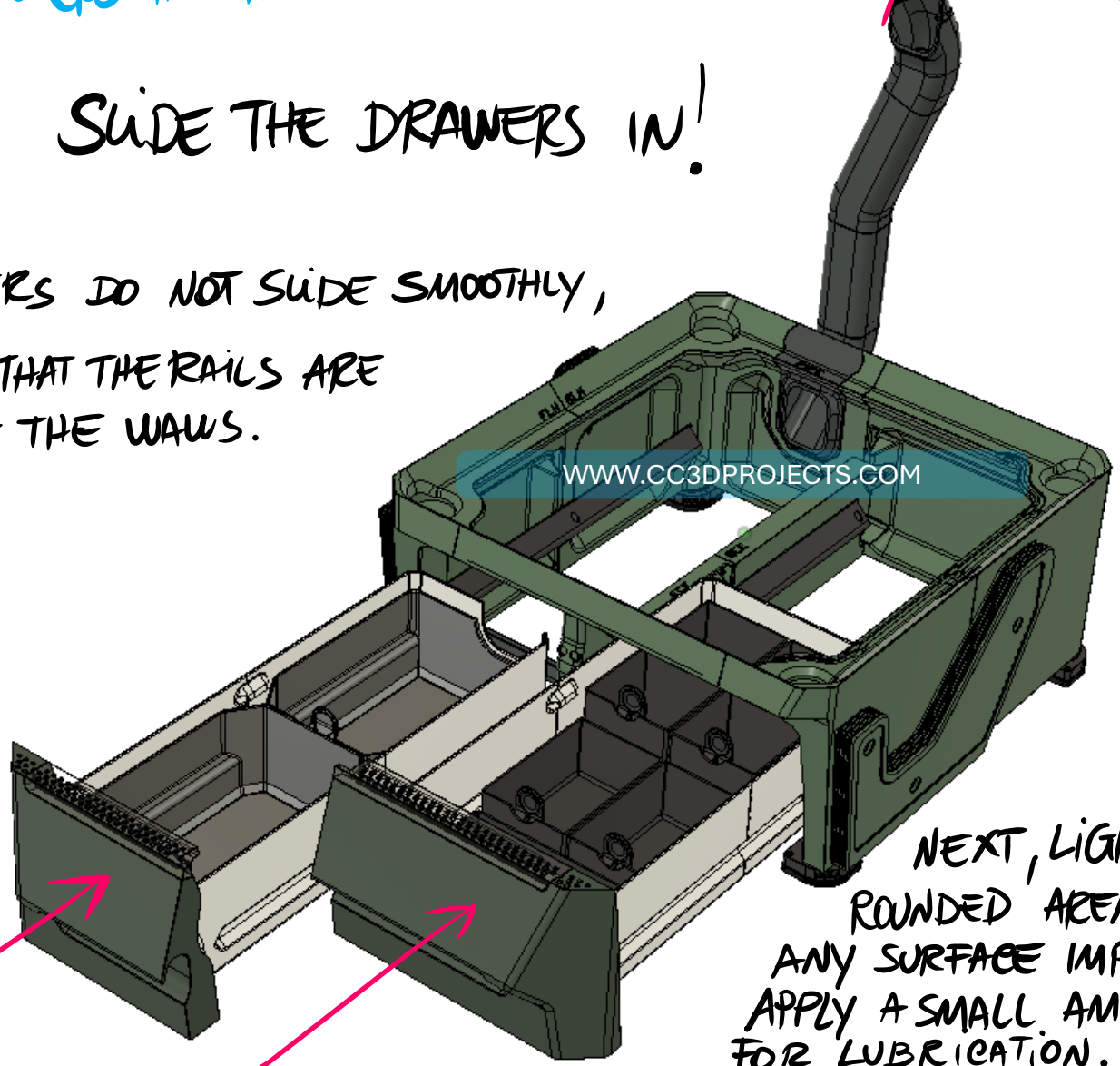

NEXT, LIGHTLY SAND THE ROUNDED AREAS TO REMOVE ANY SURFACE IMPERFECTIONS, THEN APPLY A SMALL AMOUNT OF GREASE FOR LUBRICATION.

KEEP IN MIND THAT PETG NATURALLY HAS MORE GRIP THAN PLA!

ALL MATERIAL PRODUCED AND PROVIDED HAS BEEN CONCEIVED, AUTHORED AND PRODUCED BY ENRICO MAZZAROL - ALL RIGHTS RESERVED.

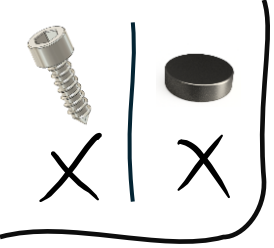

BACK PIPE INSTALLATION

NOW INSTALL THE LOWER PART OF THE REAR PIPE.

SIMPLY SLIDE THE PART INTO PLACE, WITHOUT GLUE OR SCREWS.

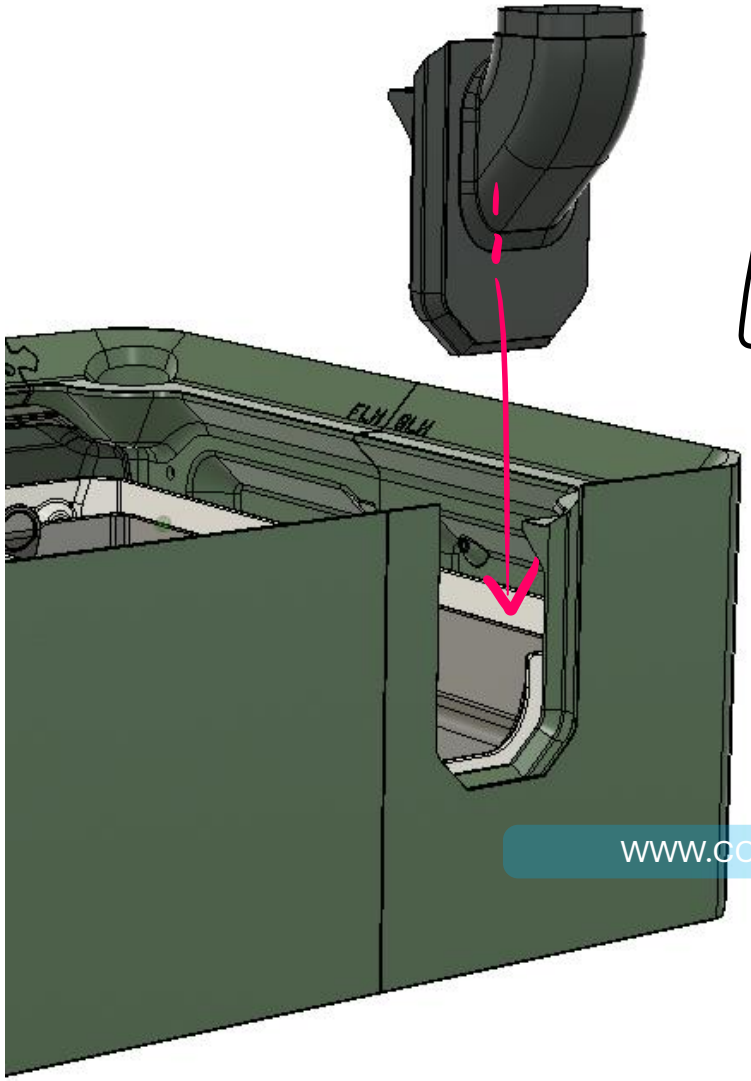

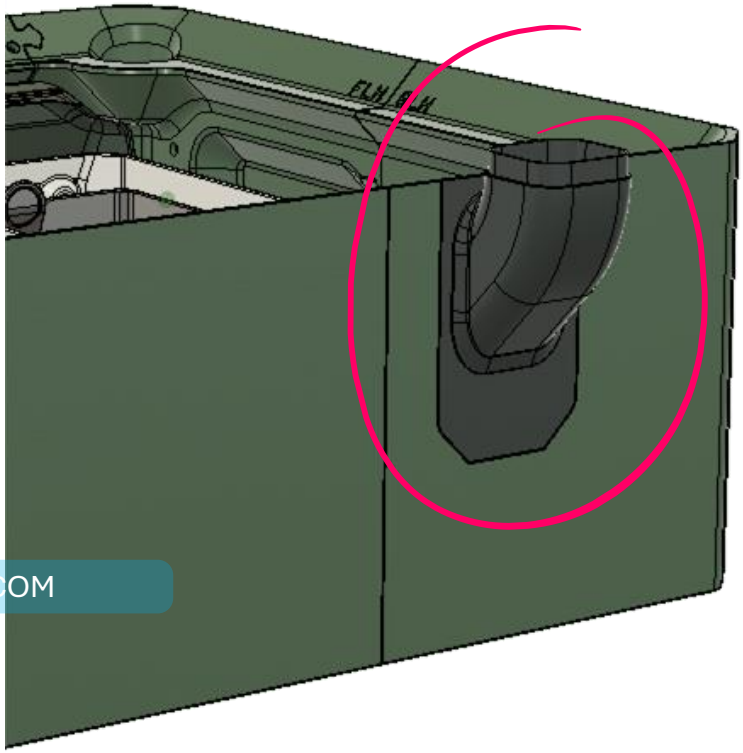

WWW.CC3DPROJECTS.COM

ALL MATERIAL PRODUCED AND PROVIDED HAS BEEN CONCEIVED, AUTHORED AND PRODUCED BY ENRICO MAZZAROL - ALL RIGHTS RESERVED.

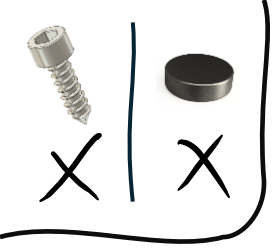

BACK PIPE INSTALLATION

CREALITY K2 PLUS DRAWER

CC3D Projects

NOW PLACE THE PRINTER ON THE DRAWER. TAKE IT EASY, AND MAYBE GET SOMEONE TO HELP. DON'T WANT YOU HURTING YOUR BACK OR DROPPING THE PRINTER!

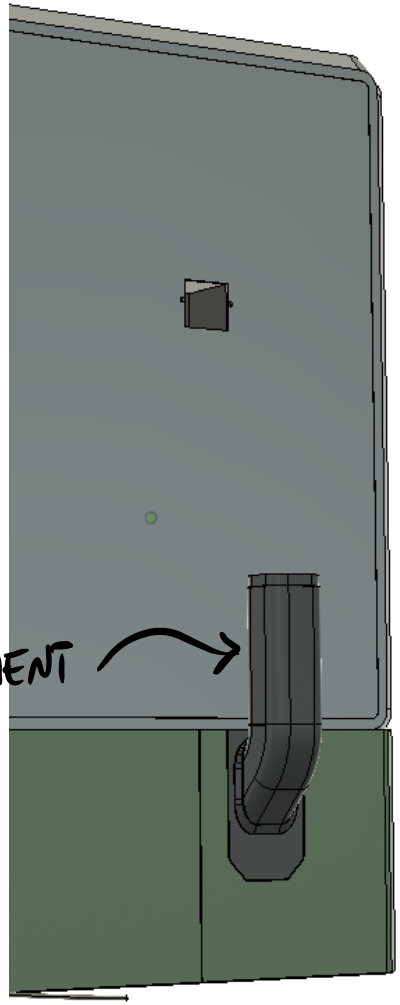

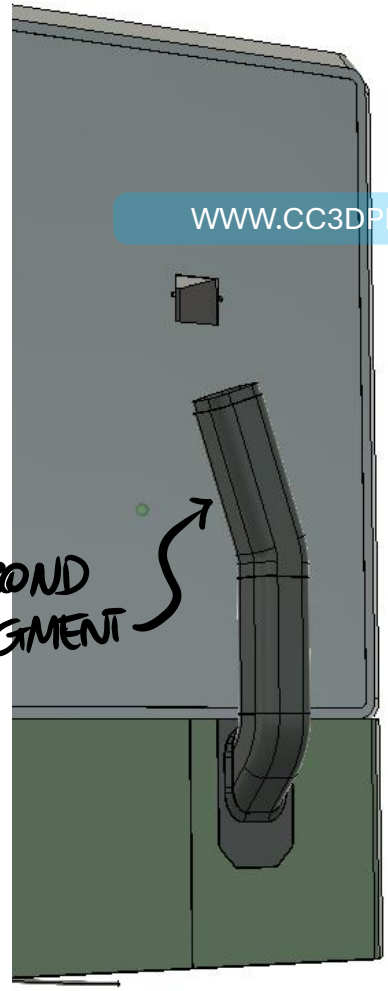

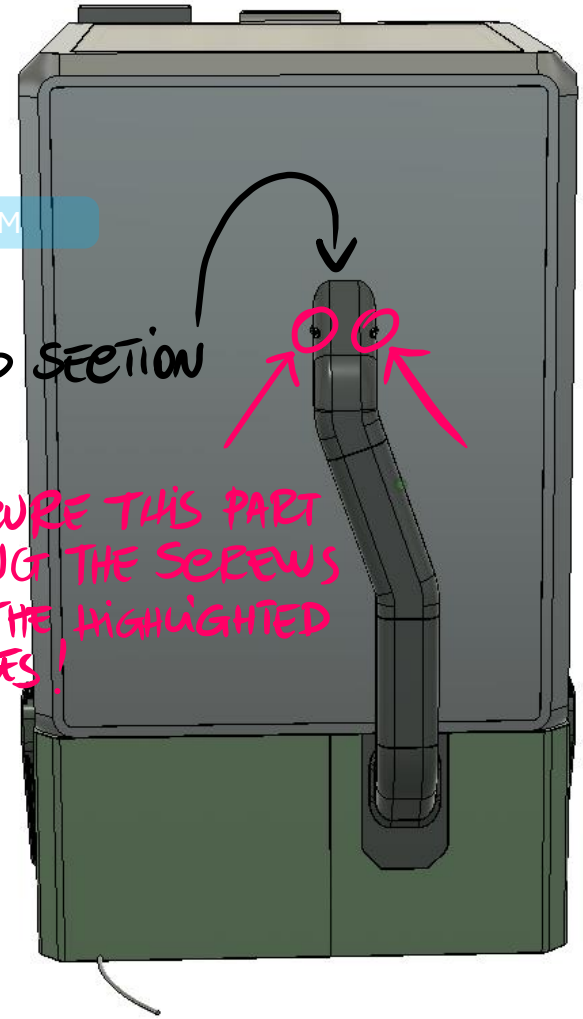

WWW.CC3DPROJECTS.COM

ALL MATERIAL PRODUCED AND PROVIDED HAS BEEN CONCEIVED, AUTHORED AND PRODUCED BY ENRICO MAZZAROL - ALL RIGHTS RESERVED.

ALRIGHT, LOOK LIKE YOU MADE IT TO THE END!

BUUUT, IF YOUR RESULT DOESN'T LOOKS KINDA LIKE THIS...

... MY FRIEND ...

WHAT ARE YOU DOING WITH YOUR LIFE? :)

SERIOUSLY THOUGH...

JUST HIT ME UP, WE'LL FIGURE OUT WHAT WENT WRONG!!

BUT

WWW.CC3DPROJECTS.COM

IF YOU ARE PROUD OF WHAT YOU BUILD (AND YOU SHOULD BE) ...

... WELL ...

...HOW ABOUT SNAPPING A COUPLE OF PICS AND TOSSING THEM ONLINE?

MAYBE TAGGING ME?

#CC3DPROJECTS

THANKS

Enrico

All material has been conceived, authored and produced by Enrico Mazzarol - All rights reserved.

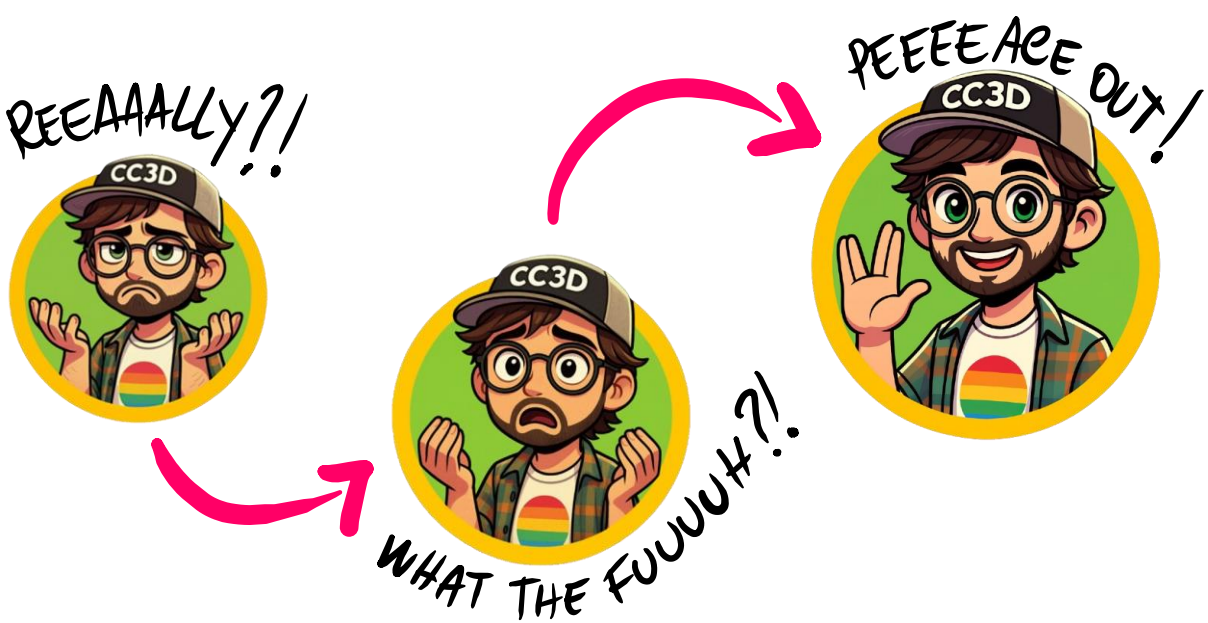

THANKS FOR STICKING WITH ME THROUGH THIS ASSEMBLY GUIDE
IT TOOK ME HOURS TO PUT THIS GUIDE TOGETHER, I TRULY HOPE YOU LIKE IT!
IF THERE'S ANYTHINK I CAN DO BETTER, PLEASE LET ME KNOW!
I'M ALWAYS HERE TO HELP AND IMPROVE MY WORK AND MY MODELS!

CIAO
Enrico

All material produced and provided has been conceived, authored and produced by Enrico Mazzarol - All rights reserved.

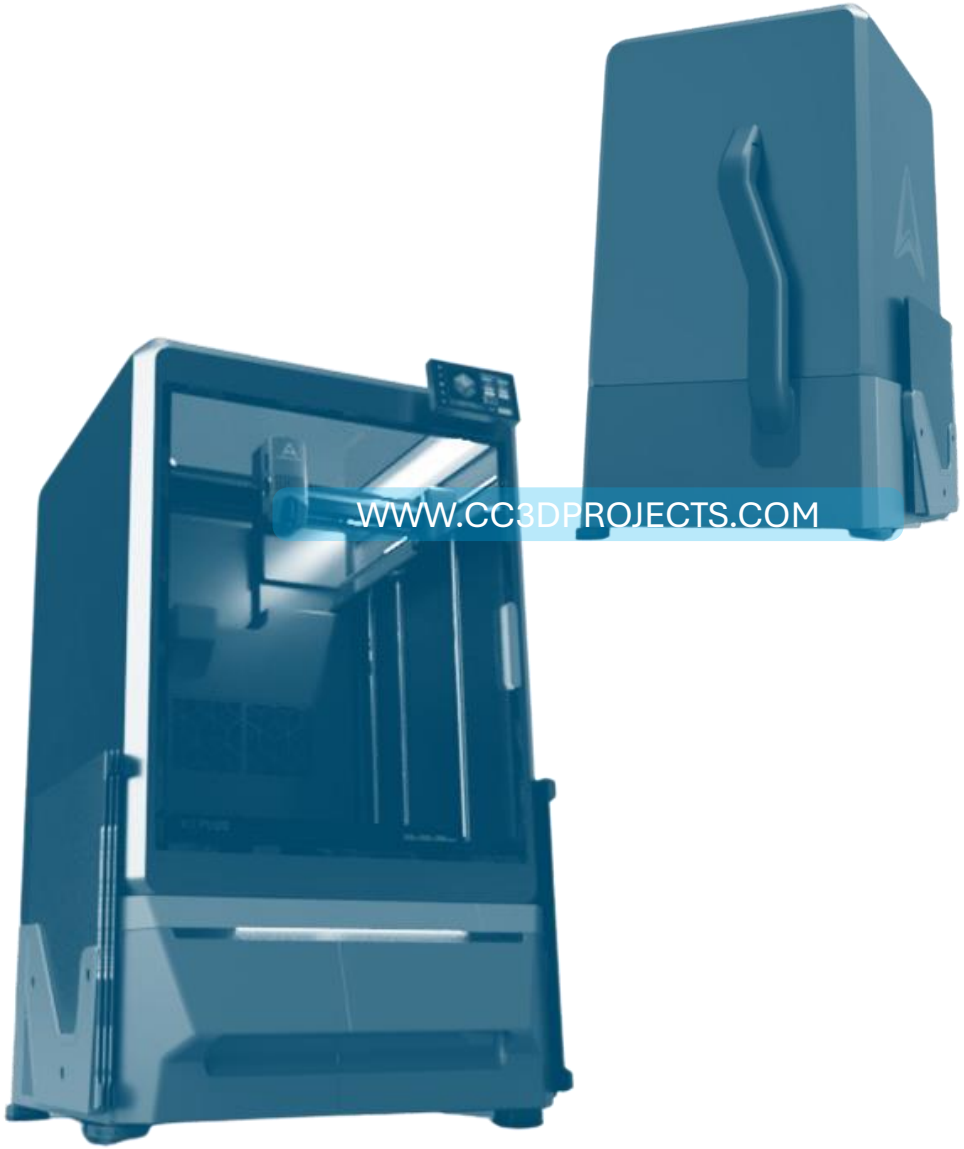

© 2025 CC3DPROJECTS. ALL RIGHTS RESERVED.

THIS MANUAL IS PROTECTED BY COPYRIGHT LAW AND MAY NOT BE REPRODUCED, DISTRIBUTED, OR USED IN WHOLE OR IN PART WITHOUT THE WRITTEN PERMISSION OF THE AUTHOR OR PUBLISHER. ANY VIOLATION WILL BE PROSECUTED TO THE FULLEST EXTENT OF THE LAW.

THE CREALITY K2 PLUS DRAWER AND ALL ITS COMPONENTS, INCLUDING BUT NOT LIMITED TO DESIGNS, SCHEMATICS, ASSEMBLY INSTRUCTIONS, AND PHOTOGRAPHS, ARE THE EXCLUSIVE PROPERTY OF ENRICO MAZZAROL AND ARE PROTECTED BY COPYRIGHT LAW AND OTHER INTELLECTUAL PROPERTY LAWS.

COPYING, DISTRIBUTING, MODIFYING, REPRODUCING, TRANSMITTING, OR USING THE HDRY SYSTEM IN ANY FORM WITHOUT THE WRITTEN PERMISSION OF CC3DPROJECTS IS PROHIBITED.

FOR USAGE REQUESTS, PERMISSIONS, OR OTHER INQUIRIES, PLEASE CONTACT CC3DPROJECT@GMAIL.COM.

All material produced and provided has been conceived, authored and produced by Enrico Mazzarol - All rights reserved.