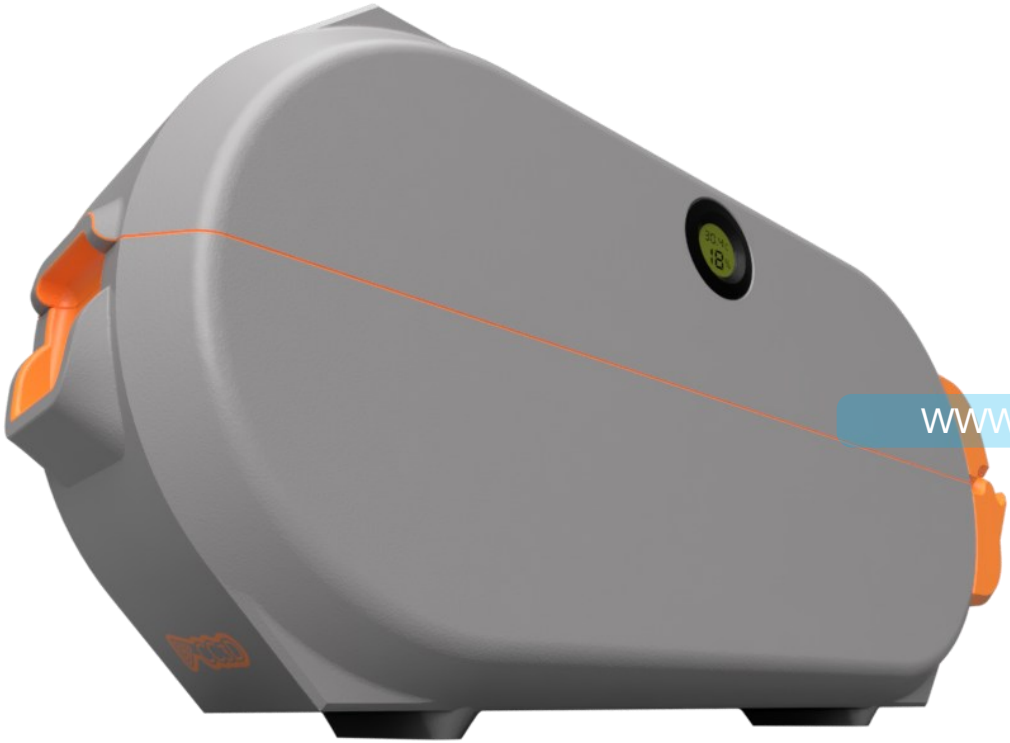

SPLBox

THE **SPLBox** IS A STORAGE BOX DESIGNED TO HOLD TWO SPOOLS, COMPLETE WITH A BUILT-IN CONTAINER FOR DESICCANT GEL AND A HUMIDITY GAUGE.

THANKS TO ITS AIRTIGHT SEALS, THE SPLBOX KEEPS YOUR SPOOLS PERFECTLY DRY AND PROTECTED FROM MOISTURE, HELPING TO MAINTAIN OPTIMAL FILAMENT CONDITION AT ALL TIMES.

WWW.CC3DPROJECTS.COM

ALL MATERIAL PRODUCED AND PROVIDED HAS BEEN CONCEIVED, AUTHORED AND PRODUCED BY ENRICO MAZZAROL - ALL RIGHTS RESERVED.

DIMENSIONS

DRWRCC

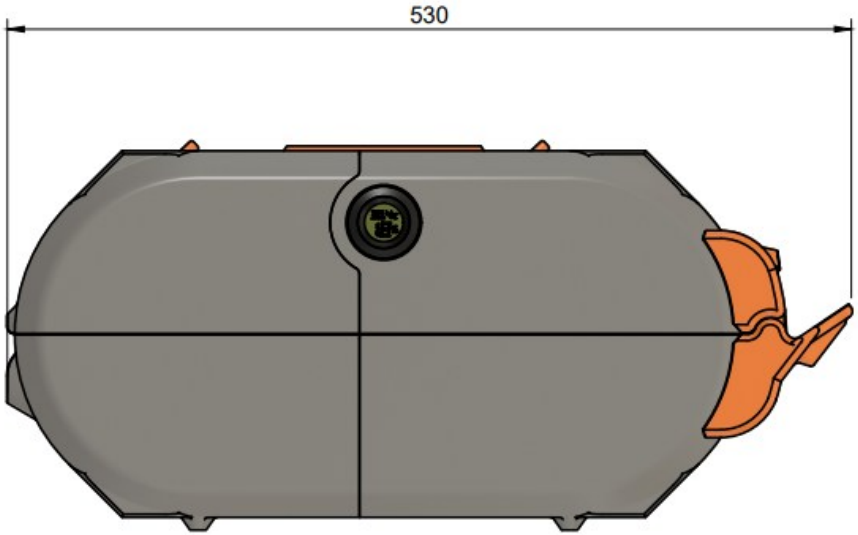

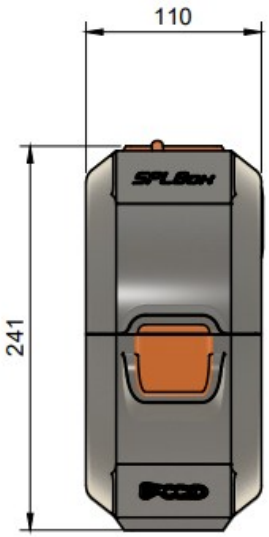

WWW.CC3DPROJECTS.COM

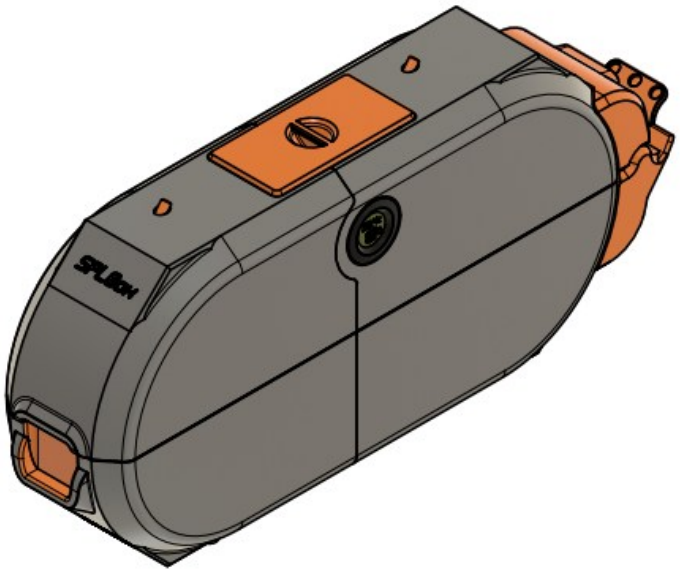

ALL MATERIAL PRODUCED AND PROVIDED HAS BEEN CONCEIVED, AUTHORED AND PRODUCED BY ENRICO MAZZAROL - ALL RIGHTS RESERVED.

MATERIALS & HARDWARES

WWW.CC3DPROJECTS.COM

REQUIRED SPARE PARTS:

SCREW **M4 14 mm** — **11 units**

MAGNET **8X2 mm** — **22 units**

HUMIDITY Sensor — **1 units**

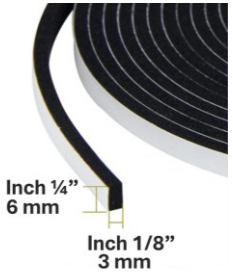

ADHESIVE GASKET — **50 cm**

PTFE TUBE — **10 cm**

ALL MATERIAL PRODUCED AND PROVIDED HAS BEEN CONCEIVED, AUTHORED AND PRODUCED BY ENRICO MAZZAROL - ALL RIGHTS RESERVED.

M4 SCREW **4**

MAGNET 8X2 **0**

SPOOL BOX TOP

SPLBox CC3D

MAKE SURE ALL PARTS AND CONNECTION POINTS ARE CLEAN AND FREE FROM ANY DEBRIS OR LEFTOVER BITS. EVERYTHING SHOULD FIT TOGETHER NICE AND SMOOTH—NO ROUGH EDGES ALLOWED!

USE THE 4 SCREWS HIGHLIGHTED IN RED TO FASTEN THE TWO PARTS TOGETHER.

Buy me a coffee

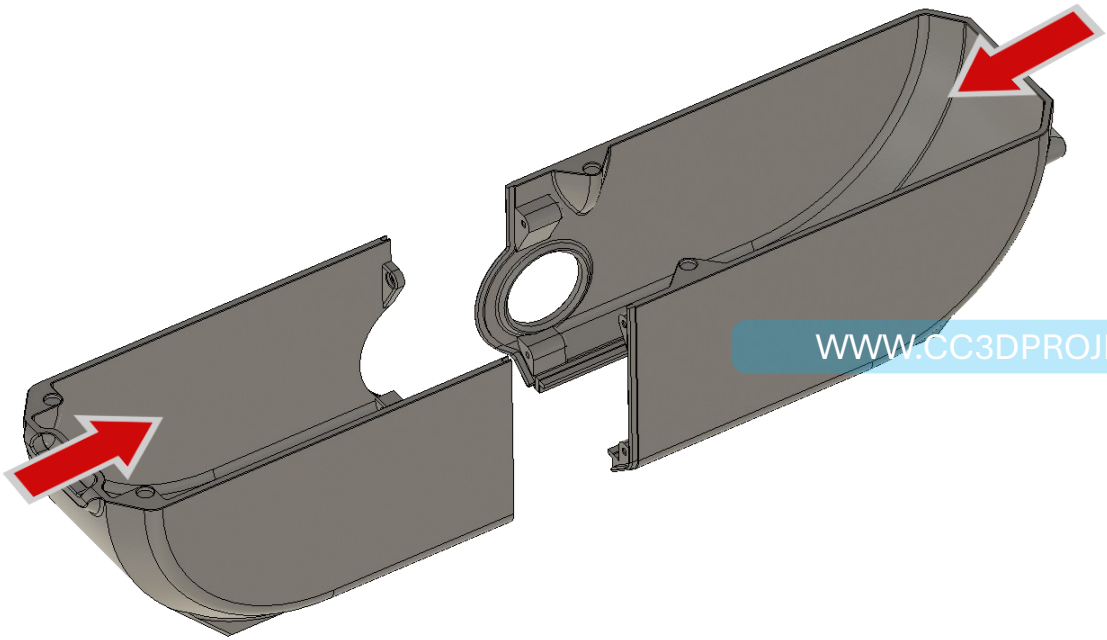

WWW.CC3DPROJECTS.COM

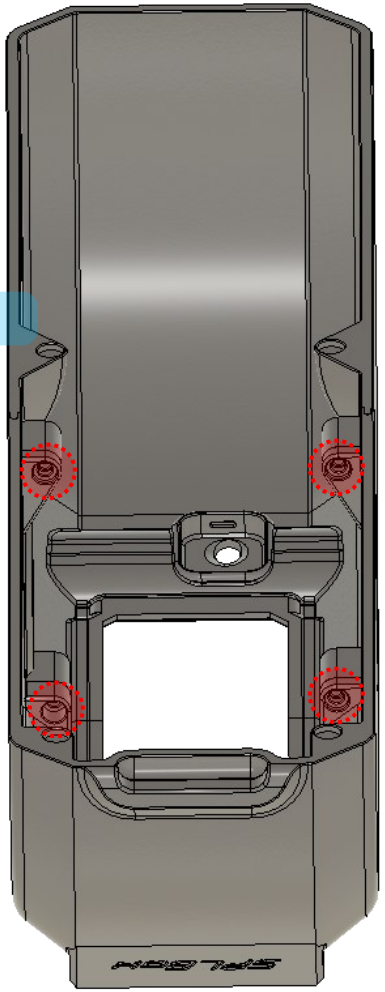

ALL MATERIAL PRODUCED AND PROVIDED HAS BEEN CONCEIVED, AUTHORED AND PRODUCED BY ENRICO MAZZAROL - ALL RIGHTS RESERVED.

M4 SCREW **0** MAGNET 8X2 **8**

SPOOL BOX TOP

SPLBox CC3D

NOW YOU NEED TO INSTALL THE MAGNETS USING MAGNET INSTALLER A (*YOU CAN FIND THE MAGNET INSTALLERS IN MY SHOP AND DOWNLOAD THEM FOR FREE*).

YOU WILL HAVE 4 MAGNETS TO INSTALL ON THE BOTTOM SIDE AND 4 ON THE TOP SIDE I HIGHLIGHTED THEM IN PURPLE

Buy me a coffee

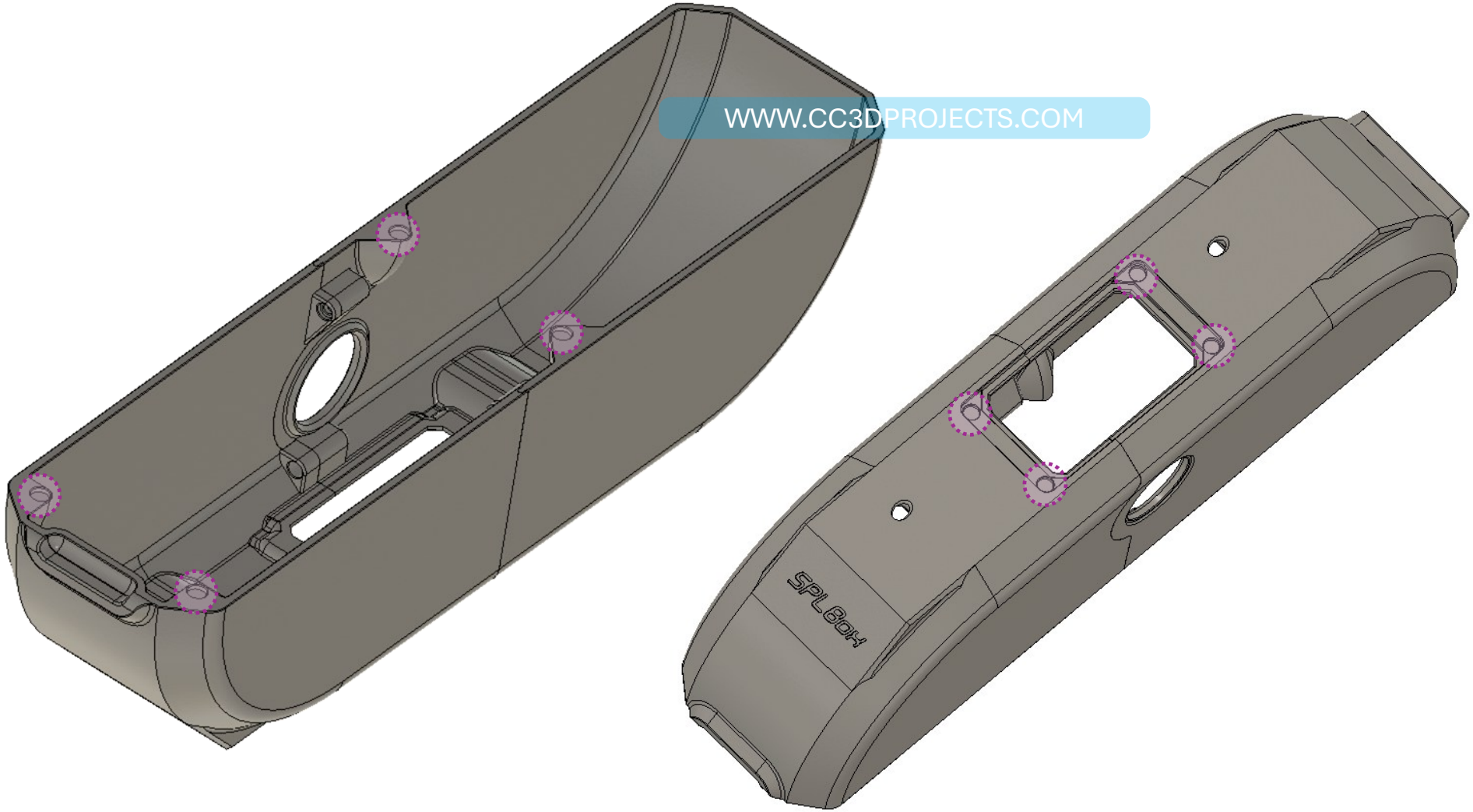

WWW.CC3DPROJECTS.COM

ALL MATERIAL PRODUCED AND PROVIDED HAS BEEN CONCEIVED, AUTHORED AND PRODUCED BY ENRICO MAZZAROL - ALL RIGHTS RESERVED.

M4 SCREW MAGNET 8X2

0 4

DESICCANT BOX

SPLBox CC3D

NOW INSTALL THE MAGNETS USING MAGNET INSTALLER B ON THE LOWER SIDE OF THE DESICCANT LID.

YOU WILL HAVE 4 MAGNETS TO INSTALL ON THE BOTTOM SIDE OF THE LID, I HIGHLIGHTED THEM IN PURPLE.

ONCE THIS IS DONE YOU WILL NEED TO APPLY THE SEAL AS SHOWN IN THE FIGURE.

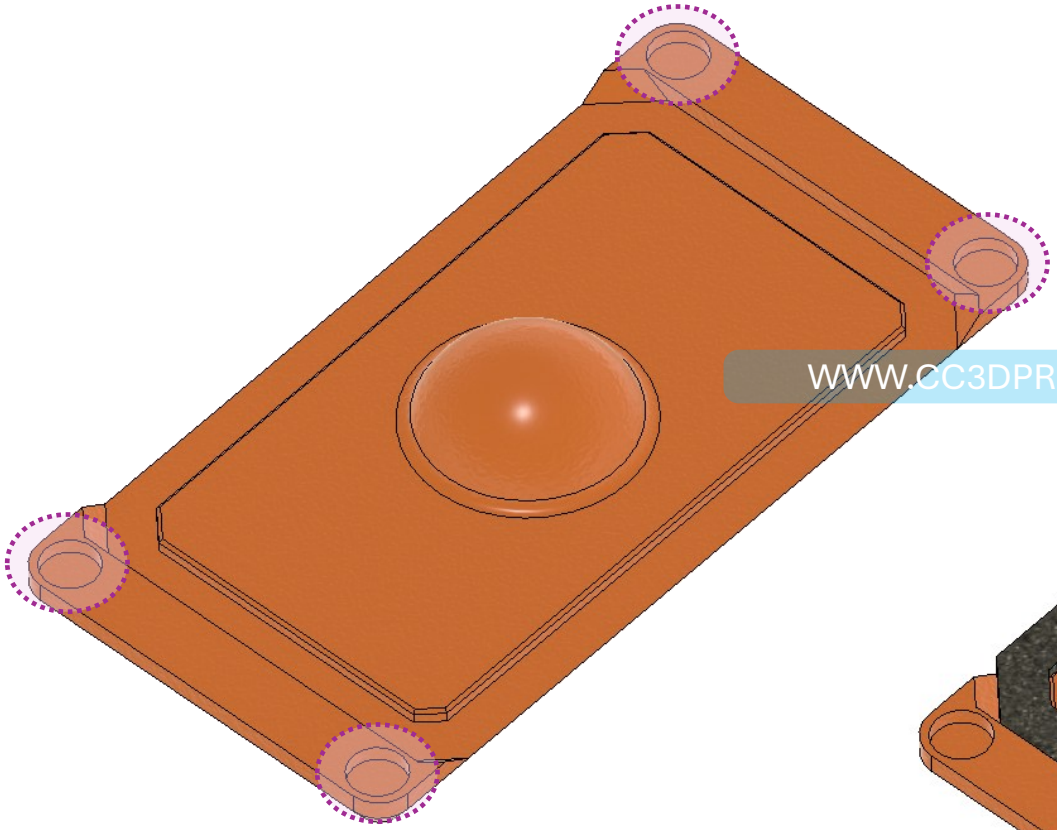

WWW.CC3DPROJECTS.COM

Buy me a coffee

ALL MATERIAL PRODUCED AND PROVIDED HAS BEEN CONCEIVED, AUTHORED AND PRODUCED BY ENRICO MAZZAROL - ALL RIGHTS RESERVED.

M4 SCREW 2

MAGNET 8X2 0

DESICCANT BOX

SPLBox CC3D

NOW INSERT THE DESICCANT BOX BUT IT'S NOT TIME TO ADD THE DESICCANT BEADS YET.

TIPI: RECOMMEND USING 3 TO 5 MM BEADS WHEN YOU BUY THEMAS YOU'LL SEE THERE'S A MAX FILL LINE INSIDE THE BOX SO WHEN YOU DO FILL IT MAKE SURE NOT TO EXCEED THAT LIMIT

NOW PLACE THE LID ON TOP IT SHOULD STAY IN PLACE THANKS TO THE MAGNETS

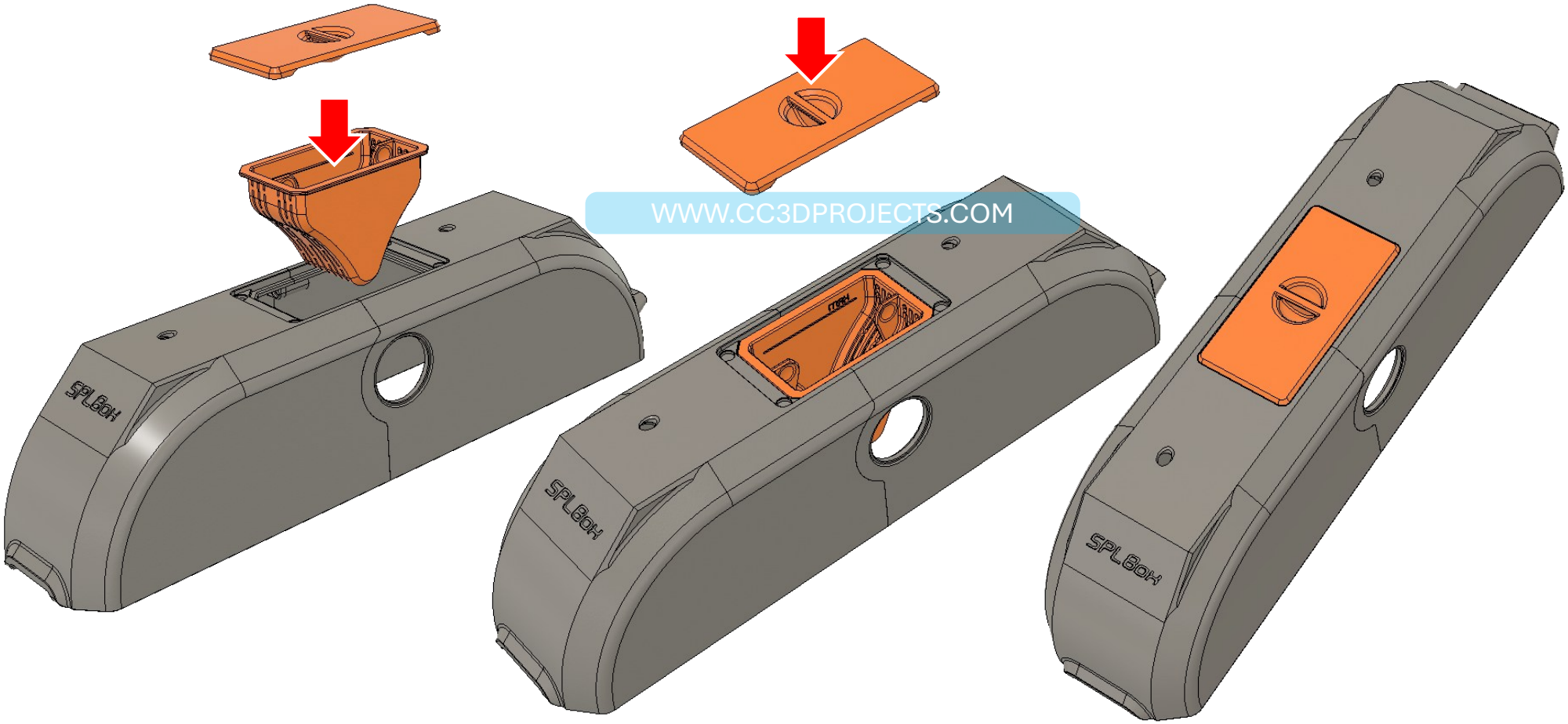

WWW.CC3DPROJECTS.COM

Buy me a coffee

ALL MATERIAL PRODUCED AND PROVIDED HAS BEEN CONCEIVED, AUTHORED AND PRODUCED BY ENRICO MAZZAROL - ALL RIGHTS RESERVED.

M4 SCREW 0 MAGNET 8X2 0

FILAMENT GUIDE

SPLBox CC3D

GET TWO 5 CM PIECES OF PTFE TUBE.

THE TUBES NEED TO BE GLUED INSIDE THE GUIDES I RECOMMEND NOT USING SUPER GLUE AS IT DOESN'T BOND WELL WITH PTFEINSTEAD USE A FLEXIBLE ADHESIVE YOU'LL ONLY NEED A DROP.

Buy me a coffee

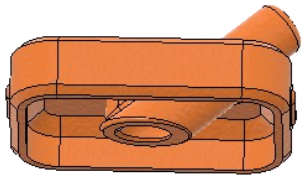

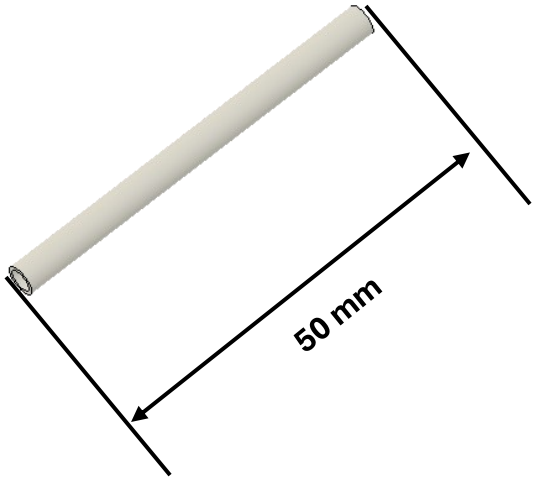

WWW.CC3DPROJECTS.COM

ALL MATERIAL PRODUCED AND PROVIDED HAS BEEN CONCEIVED, AUTHORED AND PRODUCED BY ENRICO MAZZAROL - ALL RIGHTS RESERVED.

M4 SCREW MAGNET 8X2

0 0

FILAMENT GUIDE

SPLBox CC3D

NOW IT'S TIME TO SNAP THE FILAMENT GUIDES INTO THE LID OF THE SPOOL BOX.

YOU CAN'T GO WRONG THERE'S ONLY ONE WAY TO INSERT THEM AND ONCE IN PLACE THEY SHOULD SNAP IN SECURELY.

Buy me a coffee

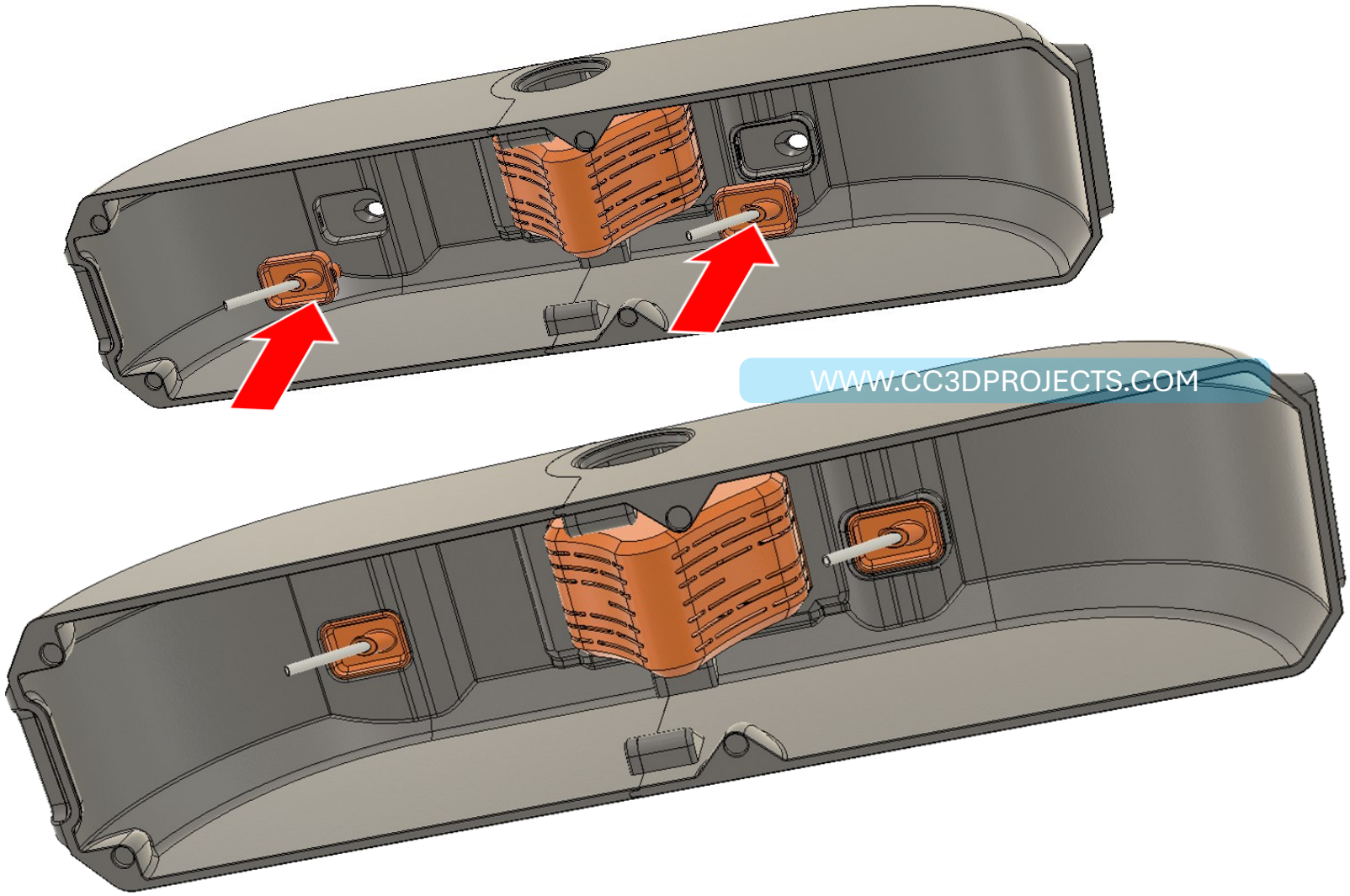

ALL MATERIAL PRODUCED AND PROVIDED HAS BEEN CONCEIVED, AUTHORED AND PRODUCED BY ENRICO MAZZAROL - ALL RIGHTS RESERVED.

M4 SCREW 0 MAGNET 8X2 0

SENSOR INSTALLATION

SUPER SIMPLE STEP JUST TAKE THE SENSOR PUSH IT IN UNTIL IT SNAPS INTO PLACE AND LOCKS THAT'S IT VOILÀ.

SPLBox CC3D

Buy me a coffee

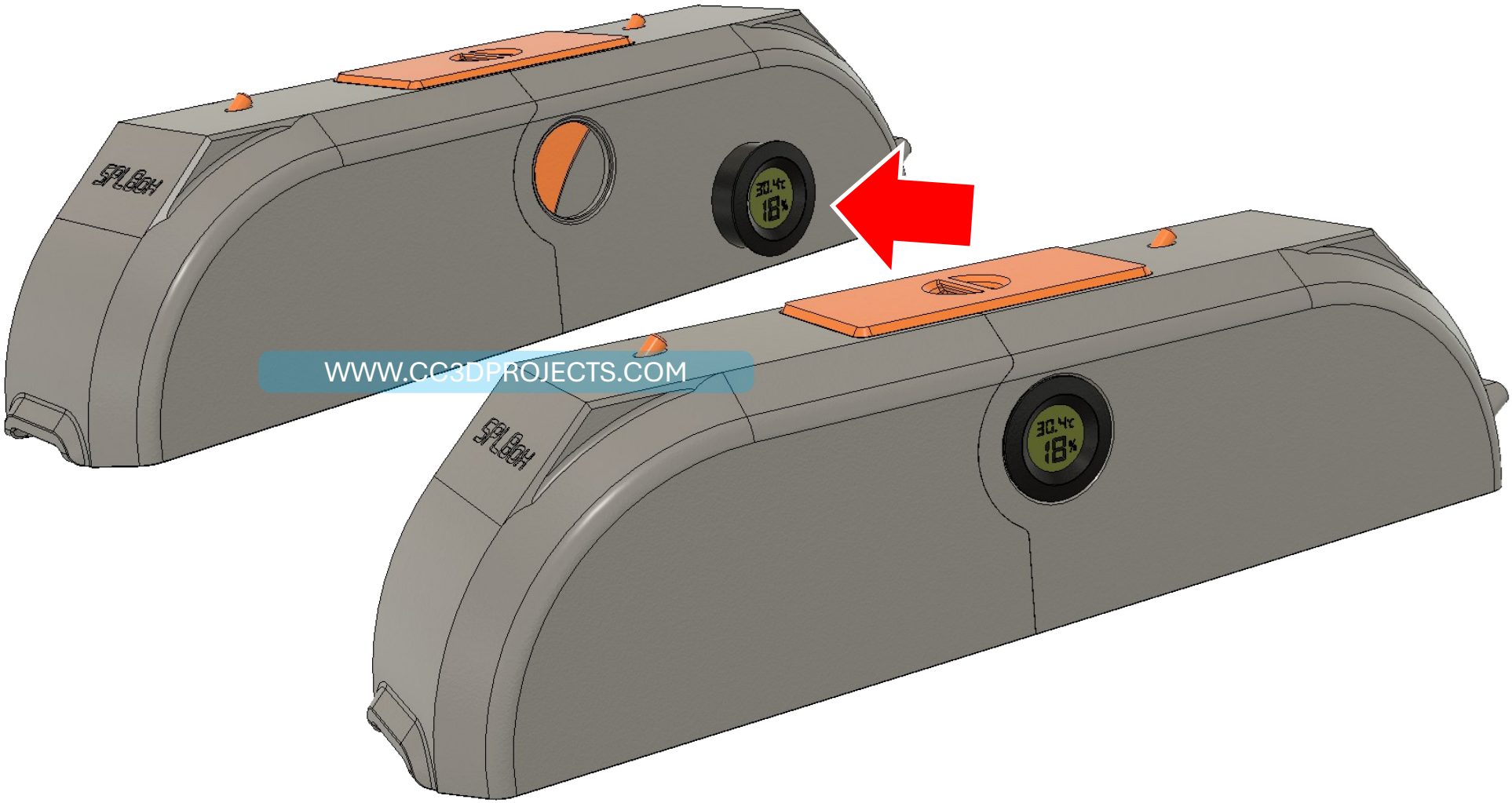

ALL MATERIAL PRODUCED AND PROVIDED HAS BEEN CONCEIVED, AUTHORED AND PRODUCED BY ENRICO MAZZAROL - ALL RIGHTS RESERVED.

M4 SCREW **2** MAGNET 8X2 **3**

HINGE INSTALLATION

SPLBox CC3D

NOW LET'S INSTALL THE HINGE ON THE BACK OF THE LID.
YOU CAN'T GO WRONG JUST SNAP IT INTO THE LID AND SECURE IT WITH THE TWO SCREWS HIGHLIGHTED IN RED COLOR.

THEN INSTALL THE MAGNETS USING INSTALLER A IN THE HOLES HIGHLIGHTED IN PURPLE

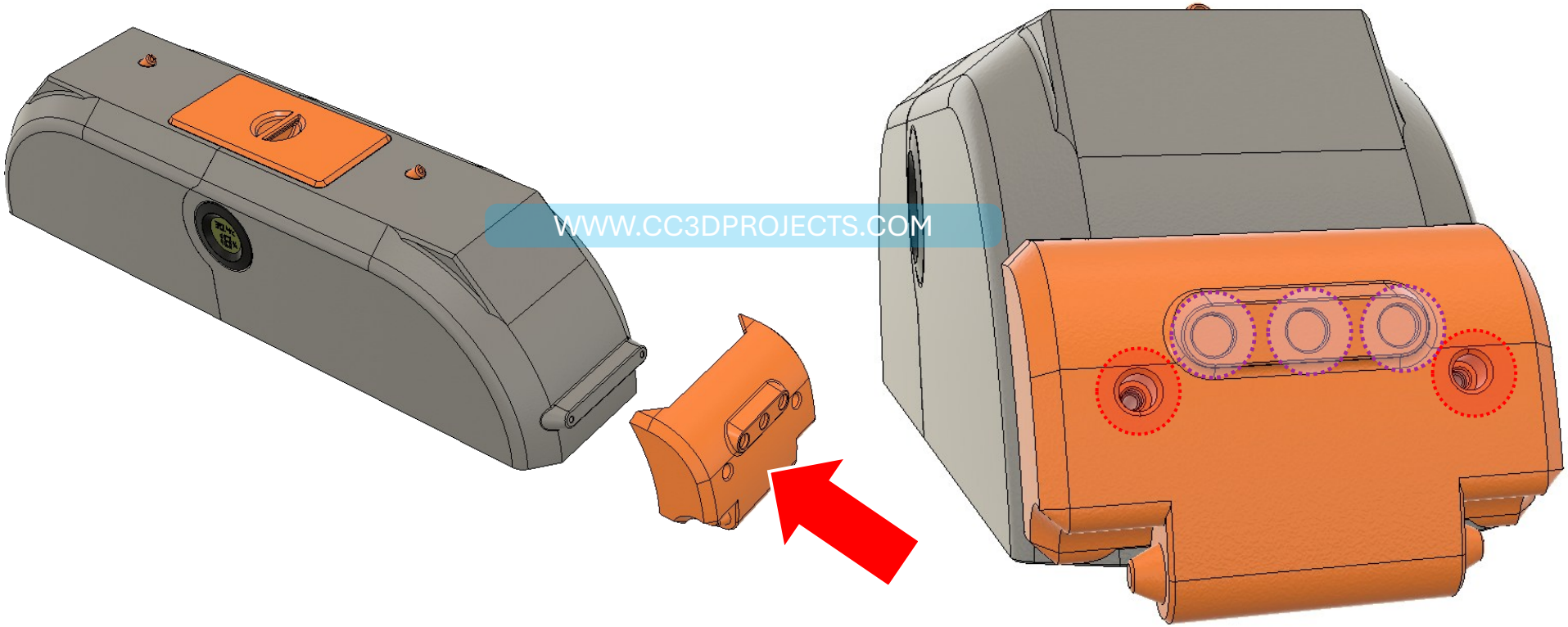

WWW.CC3DPROJECTS.COM

Buy me a coffee

ALL MATERIAL PRODUCED AND PROVIDED HAS BEEN CONCEIVED, AUTHORED AND PRODUCED BY ENRICO MAZZAROL - ALL RIGHTS RESERVED.

M4 SCREW **3** MAGNET 8X2 **4**

SPOOL BOX BOTTOM

SPLBox CC3D

MAKE SURE ALL PARTS AND CONNECTION POINTS ARE CLEAN AND FREE FROM ANY DEBRIS OR LEFTOVER BITS. EVERYTHING SHOULD FIT TOGETHER NICE AND SMOOTH—NO ROUGH EDGES ALLOWED!

USE THE 3 SCREWS HIGHLIGHTED IN RED TO FASTEN THE TWO PARTS TOGETHER.

THEN GLUE THE MAGNETS INTO THE HOLES HIGHLIGHTED IN PURPLE USING INSTALLER B.

Buy me a coffee

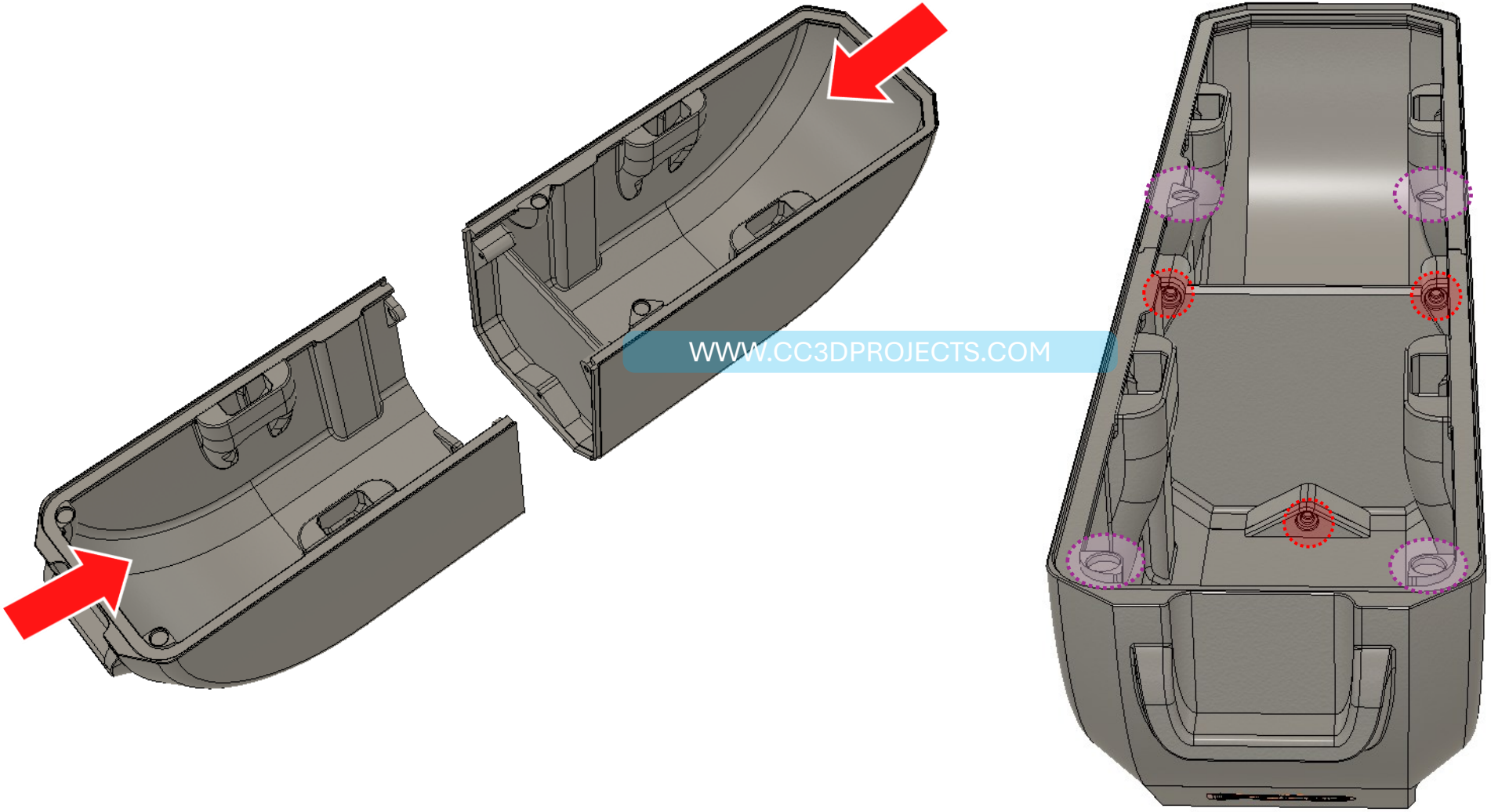

WWW.CC3DPROJECTS.COM

ALL MATERIAL PRODUCED AND PROVIDED HAS BEEN CONCEIVED, AUTHORED AND PRODUCED BY ENRICO MAZZAROL - ALL RIGHTS RESERVED.

M4 SCREW **2**

MAGNET 8X2 **0**

SPOOL BOX BOTTOM

NOW INSTALL THE USUAL SEAL AROUND THE ENTIRE PERIMETER USING THE GROOVE AS A GUIDE.

SPLBox CC3D

Buy me a coffee

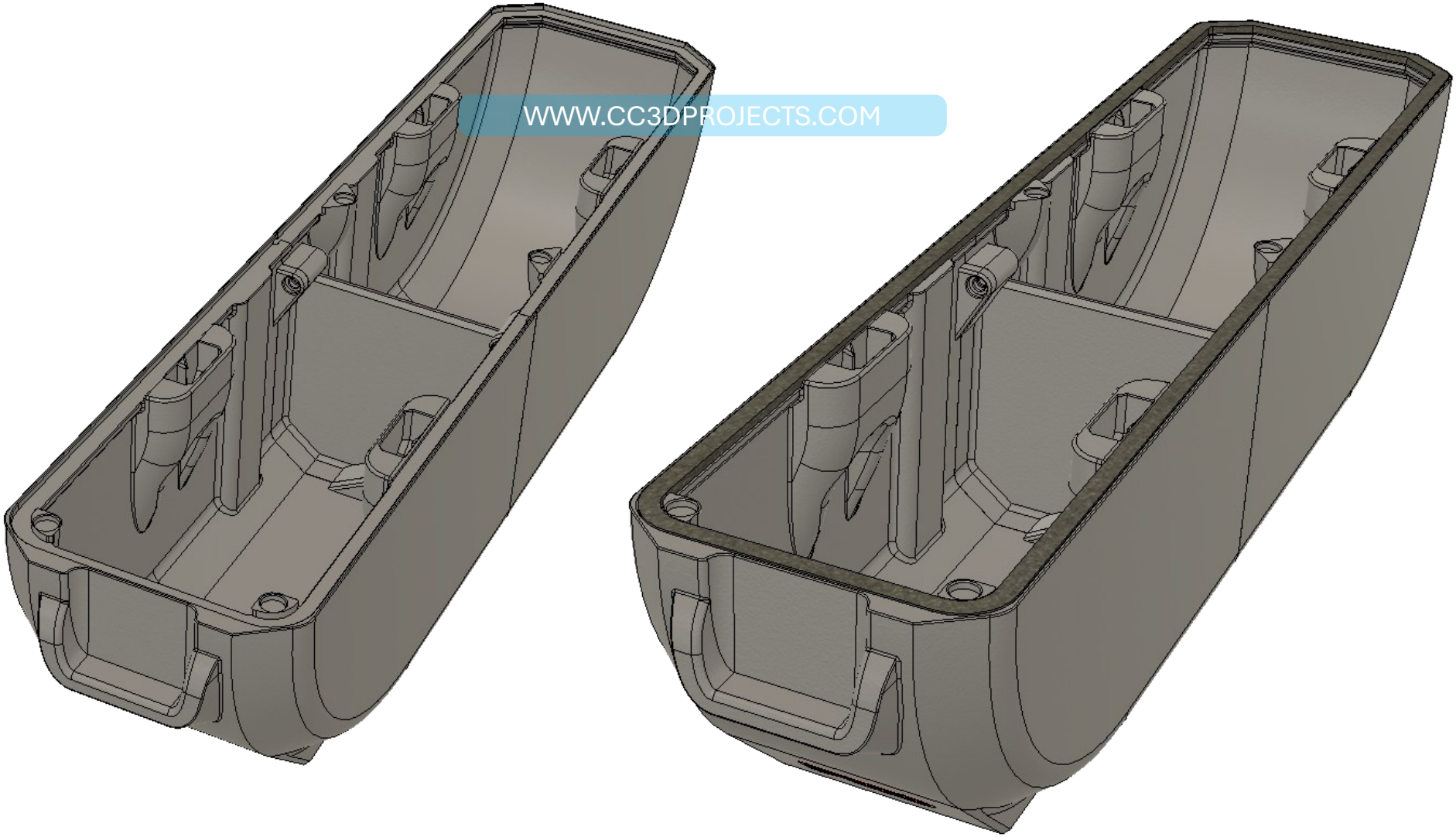

WWW.CC3DPROJECTS.COM

ALL MATERIAL PRODUCED AND PROVIDED HAS BEEN CONCEIVED, AUTHORED AND PRODUCED BY ENRICO MAZZAROL - ALL RIGHTS RESERVED.

M4 SCREW **2**

MAGNET 8X2 **3**

HINGE INSTALLATION

SPLBox CC3D

NOW LET'S INSTALL THE HINGE ON THE BACK OF THE LID.
YOU CAN'T GO WRONG JUST SNAP IT INTO THE LID AND SECURE IT WITH THE TWO SCREWS HIGHLIGHTED IN RED COLOR.

THEN INSTALL THE MAGNETS USING INSTALLER B IN THE HOLES HIGHLIGHTED IN PURPLE.

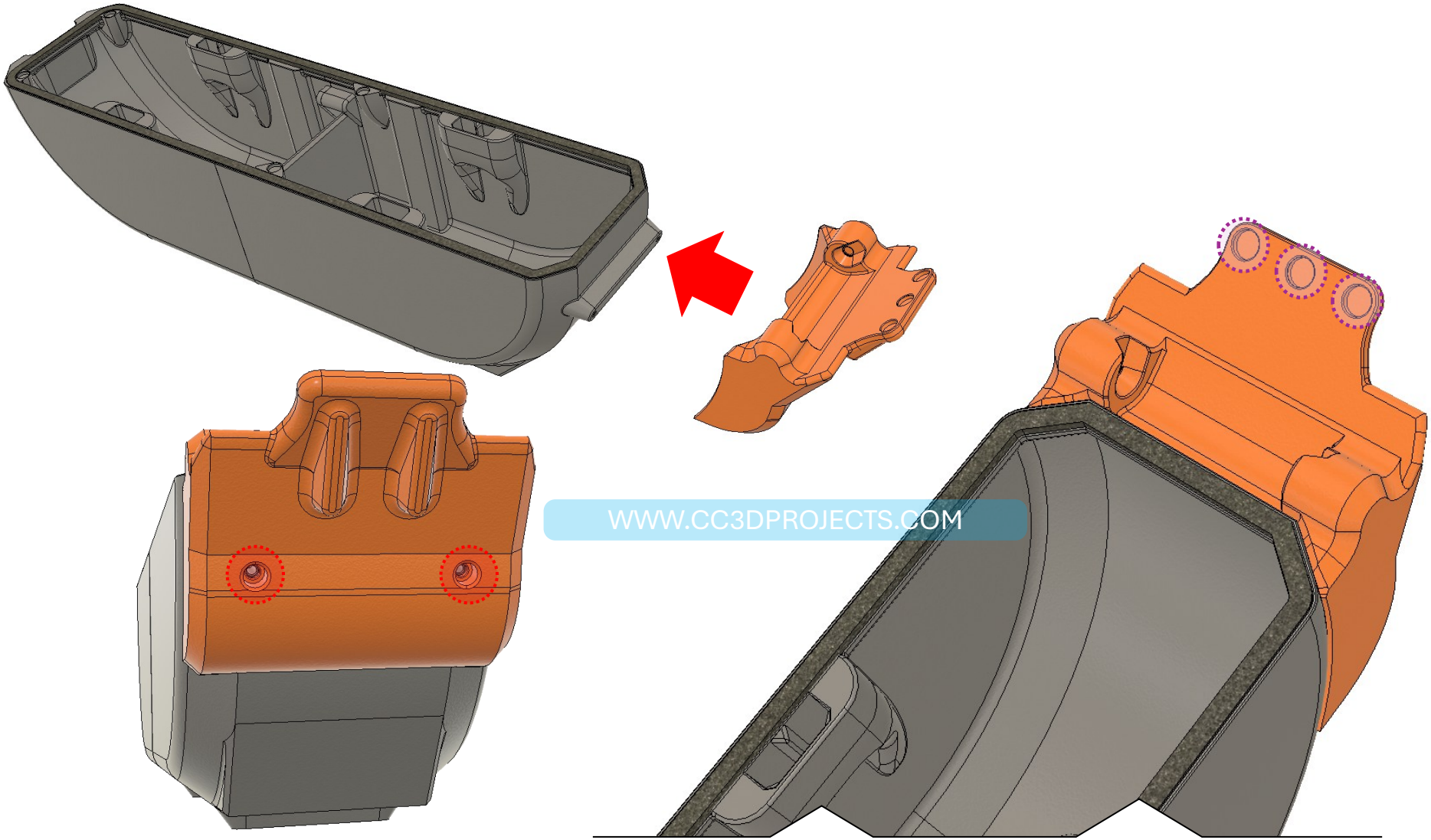

WWW.CC3DPROJECTS.COM

Buy me a coffee

ALL MATERIAL PRODUCED AND PROVIDED HAS BEEN CONCEIVED, AUTHORED AND PRODUCED BY ENRICO MAZZAROL - ALL RIGHTS RESERVED.

M4 SCREW MAGNET 8X2

0 0

SPOOL SUPPOTS AND SPOOLS

SPLBox CC3D

TO INSTALL THE SPOOL SUPPORTS FIRST INSERT THEM INTO THE CENTER HOLE OF THE SPOOL THEN LOWER EVERYTHING DOWN AND SLOT BOTH ENDS OF THE SPOOL SUPPORT INTO THEIR DESIGNATED HOLES AND YOU'RE DONE.

Buy me a coffee

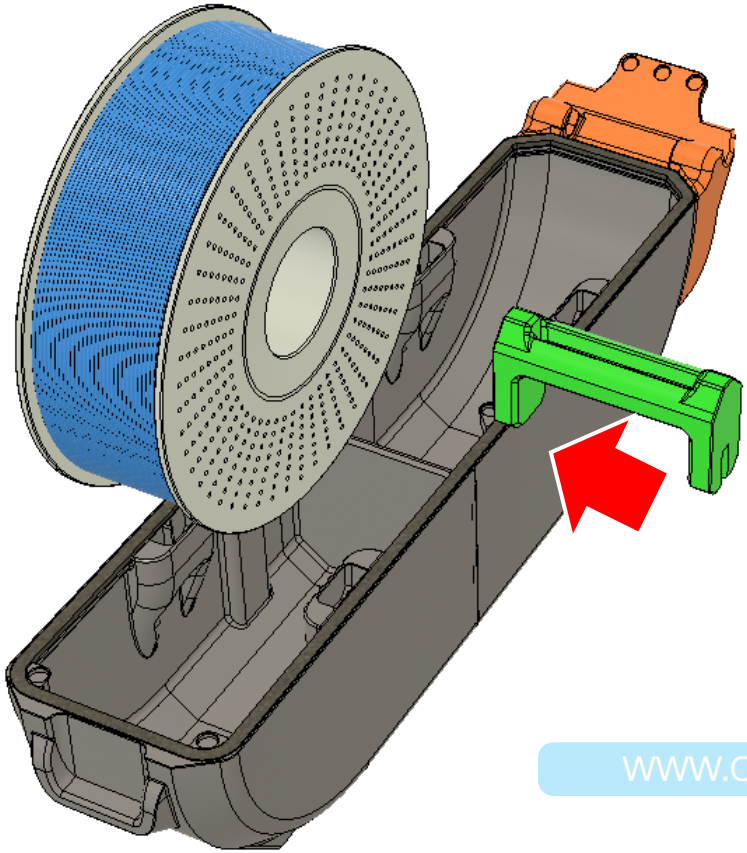

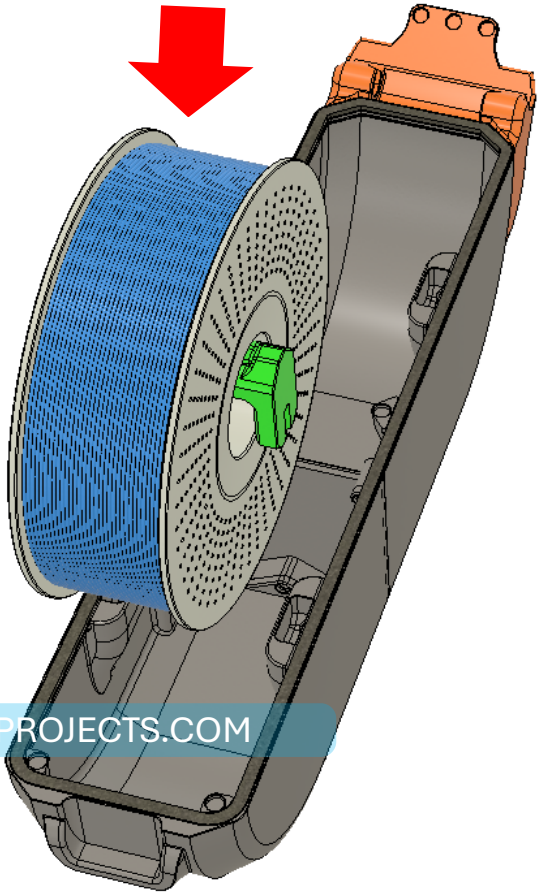

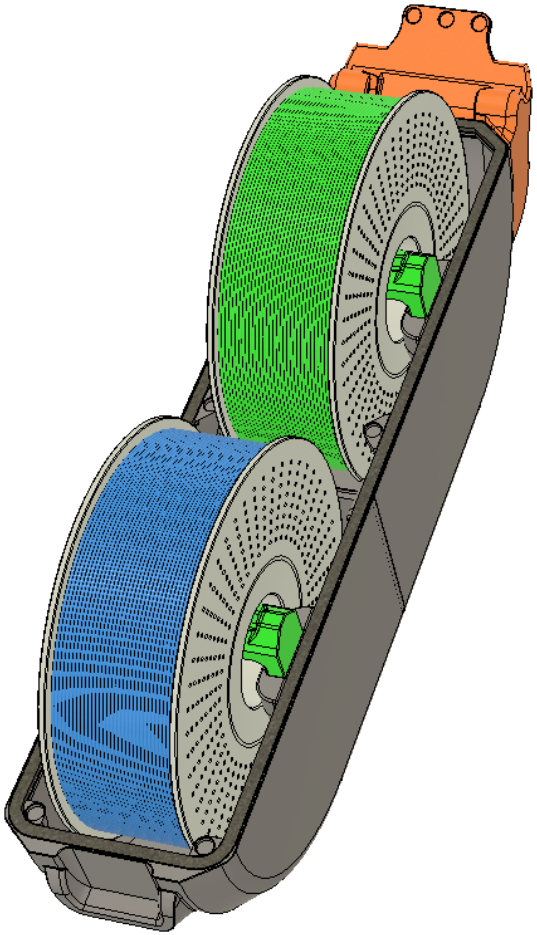

WWW.CC3DPROJECTS.COM

ALL MATERIAL PRODUCED AND PROVIDED HAS BEEN CONCEIVED, AUTHORED AND PRODUCED BY ENRICO MAZZAROL - ALL RIGHTS RESERVED.

M4 SCREW 0 MAGNET 8X2 0

FINAL ASSEMBLY

SPLBox CC3D

HOLD THE LID AT AN ANGLE AND INSERT IT BY ALIGNING IT WITH THE SLOTS IN THE HINGE ON THE LOWER PART OF THE BOTTOM.

Buy me a coffee

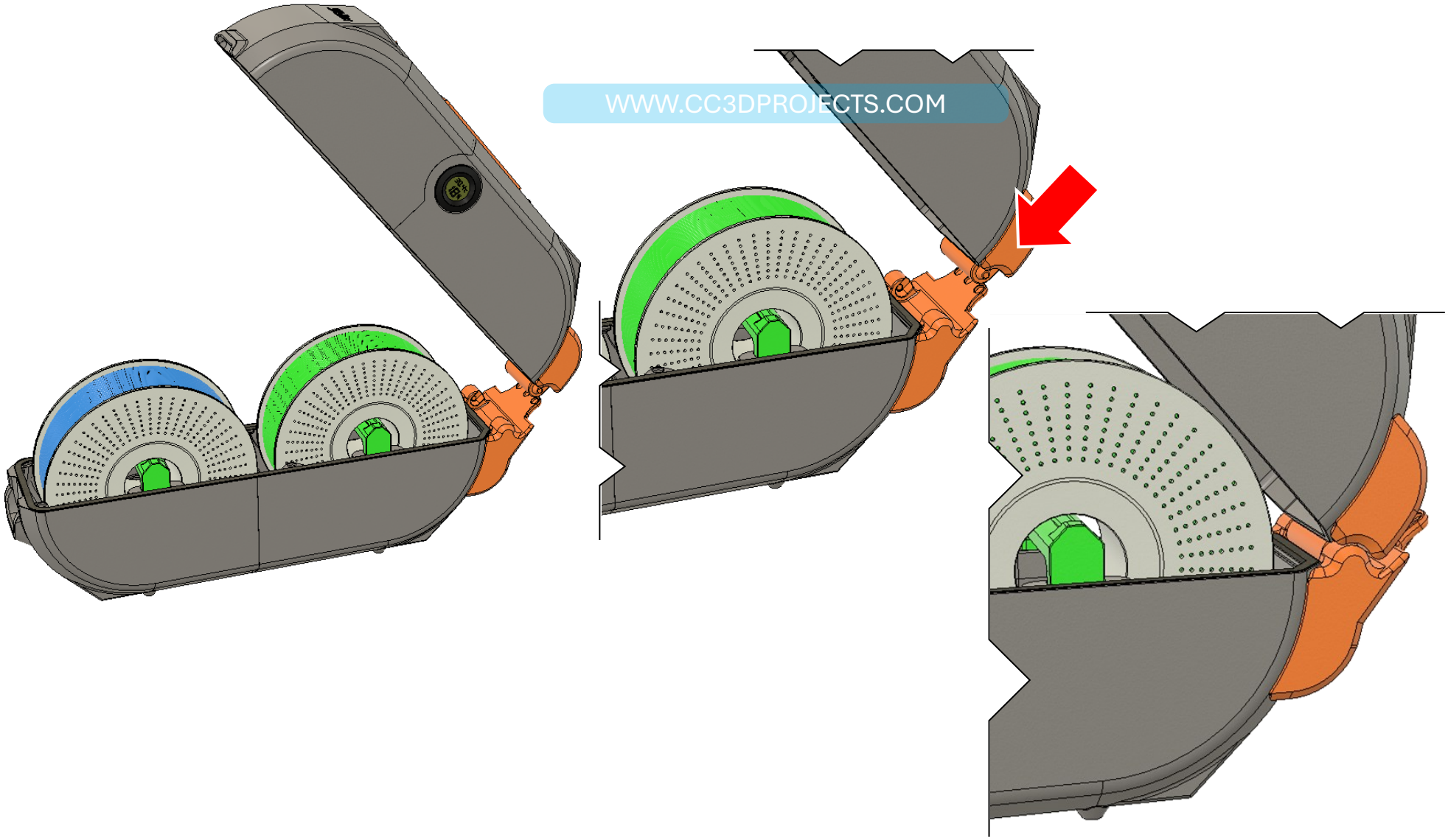

WWW.CC3DPROJECTS.COM

ALL MATERIAL PRODUCED AND PROVIDED HAS BEEN CONCEIVED, AUTHORED AND PRODUCED BY ENRICO MAZZAROL - ALL RIGHTS RESERVED.

M4 SCREW 0 MAGNET 8X2 0

FINAL ASSEMBLY

NOW ROTATE THE LID UNTIL IT'S FULLY CLOSED.

SPLBox CC3D

Buy me a coffee

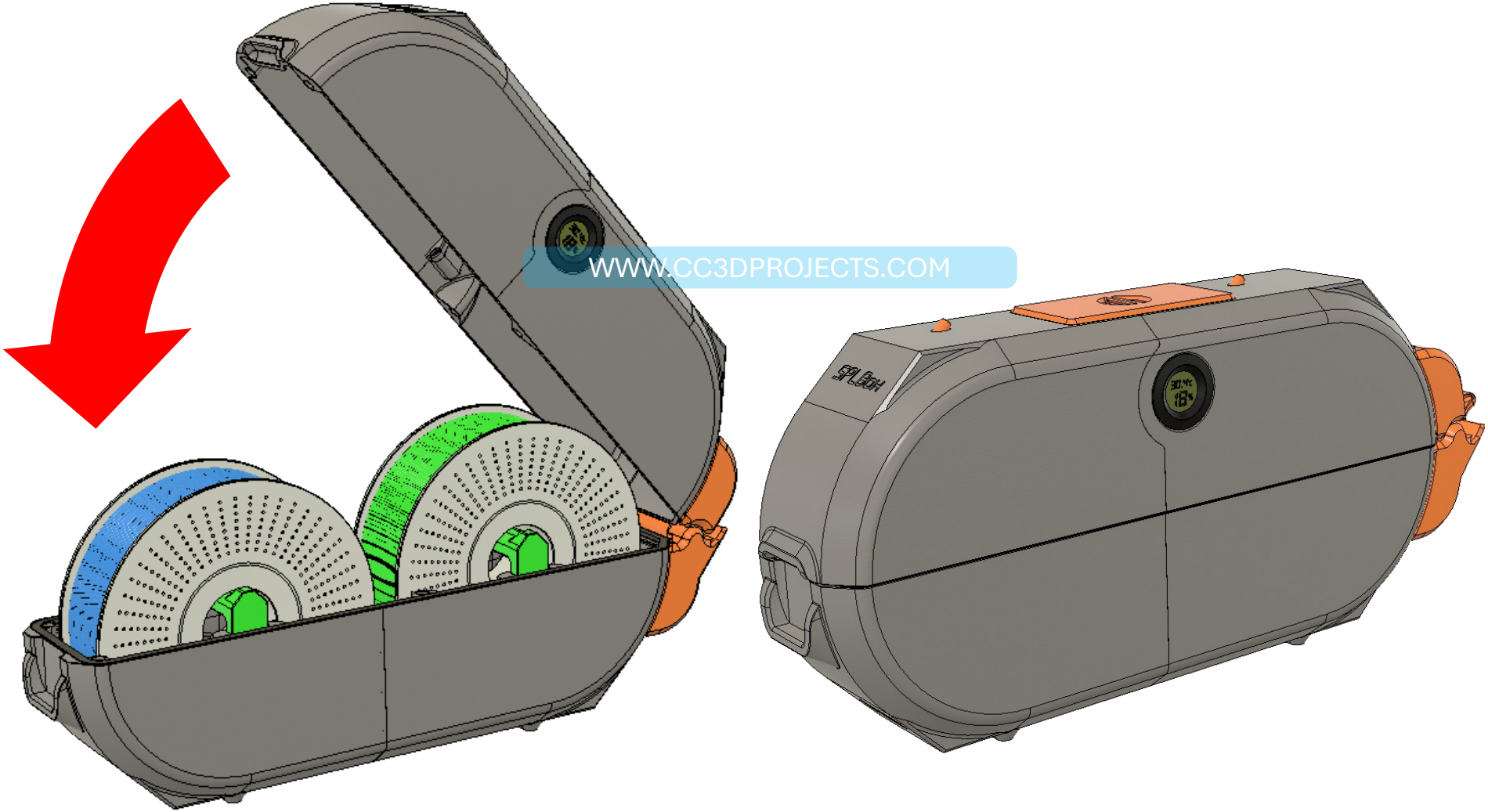

WWW.CC3DPROJECTS.COM

ALL MATERIAL PRODUCED AND PROVIDED HAS BEEN CONCEIVED, AUTHORED AND PRODUCED BY ENRICO MAZZAROL - ALL RIGHTS RESERVED.

M4 SCREW 0 MAGNET 8X2 0

FINAL INSTALLATION

SPLBox CC3D

NOW, IF YOU WANT TO ATTACH THE SPOOL BOX TO THE DRAWER, FIRST INSTALL THE RAILS — YOU CAN FIND THAT STEP IN THE DRAWER INSTALLATION MANUAL.THEN, SLIDE THE RAILS IN AND LET THE SPOOL BOX GLIDE DOWN UNTIL IT RESTS ON THE SUPPORT SURFACE.

OF COURSE, THIS BOX CAN ALSO BE USED EVEN IF IT'S NOT CONNECTED TO THE DRAWER AND POSSIBLY WITH OTHER PRINTERS AS WELL.

Buy me a coffee

WWW.CC3DPROJECTS.COM

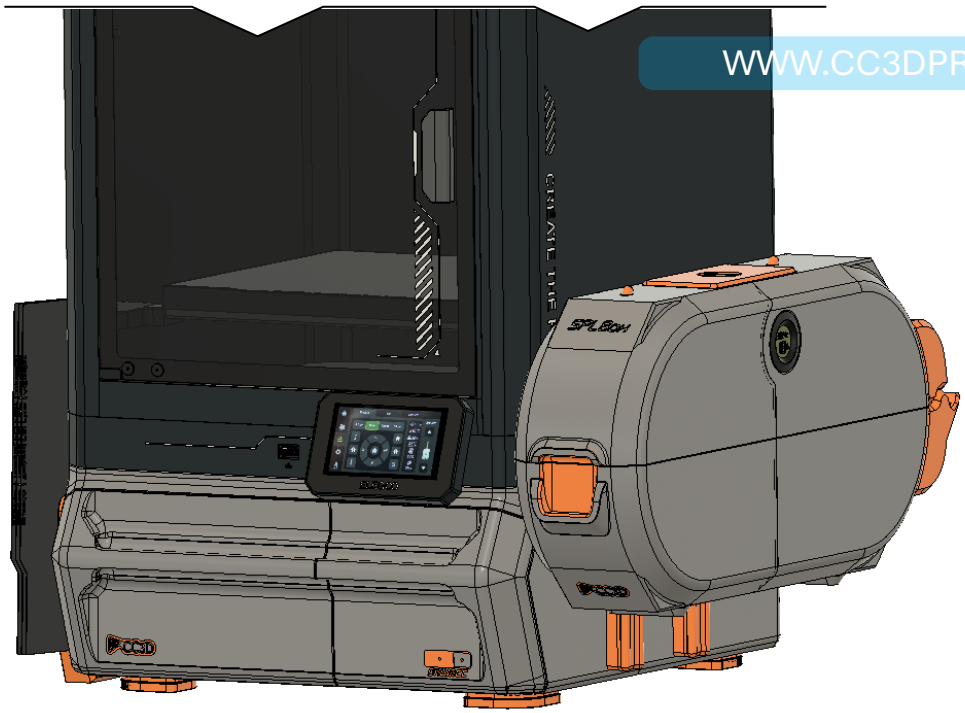

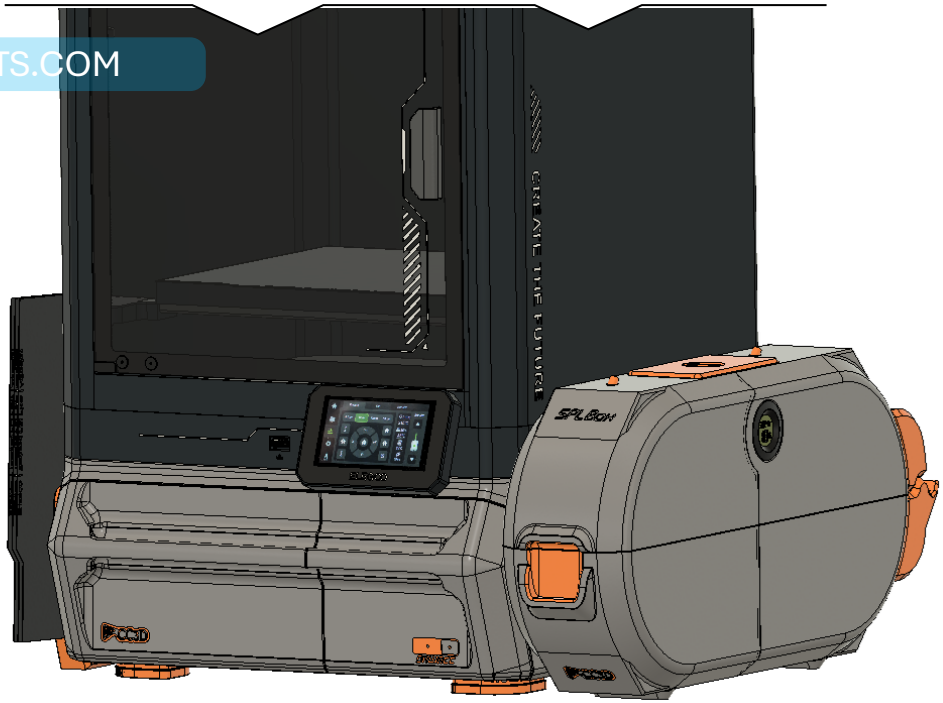

ALL MATERIAL PRODUCED AND PROVIDED HAS BEEN CONCEIVED, AUTHORED AND PRODUCED BY ENRICO MAZZAROL - ALL RIGHTS RESERVED.

THANKS FOR STICKING WITH ME THROUGH THIS ASSEMBLY GUIDE!

IT TOOK ME HOURS TO PUT THIS GUIDE TOGETHER, AND I TRULY HOPE IT'S BEEN CLEAR AND EASY TO FOLLOW.

IF THERE'S ANYTHING THAT WASN'T SUPER CLEAR OR IF YOU FEEL LIKE SOMETHING'S MISSING, DON'T HESITATE TO REACH OUT.

I'M ALWAYS HERE TO HELP AND PROVIDE ANY SUPPORT OR CLARIFICATION YOU NEED.

ENJOY YOUR NEW FEATURE!

CIAO!!!

Buy me a coffee

All material produced and provided has been conceived, authored and produced by Enrico Mazzarol - All rights reserved.

© 2025 CC3DPROJECTS. ALL RIGHTS RESERVED.

THIS MANUAL IS PROTECTED BY COPYRIGHT LAW AND MAY NOT BE REPRODUCED, DISTRIBUTED, OR USED IN WHOLE OR IN PART WITHOUT THE WRITTEN PERMISSION OF THE AUTHOR OR PUBLISHER. ANY VIOLATION WILL BE PROSECUTED TO THE FULLEST EXTENT OF THE LAW.

THE SPLBox AND ALL ITS COMPONENTS, INCLUDING BUT NOT LIMITED TO DESIGNS, SCHEMATICS, ASSEMBLY INSTRUCTIONS, AND PHOTOGRAPHS, ARE THE EXCLUSIVE PROPERTY OF ENRICO MAZZAROL AND ARE PROTECTED BY COPYRIGHT LAW AND OTHER INTELLECTUAL PROPERTY LAWS.

COPYING, DISTRIBUTING, MODIFYING, REPRODUCING, TRANSMITTING, OR USING THE HDRY SYSTEM IN ANY FORM WITHOUT THE WRITTEN PERMISSION OF CC3DPROJECTS IS PROHIBITED.

FOR USAGE REQUESTS, PERMISSIONS, OR OTHER INQUIRIES, PLEASE CONTACT CC3DPROJECT@GMAIL.COM.

All material produced and provided has been conceived, authored and produced by Enrico Mazzarol - All rights reserved.