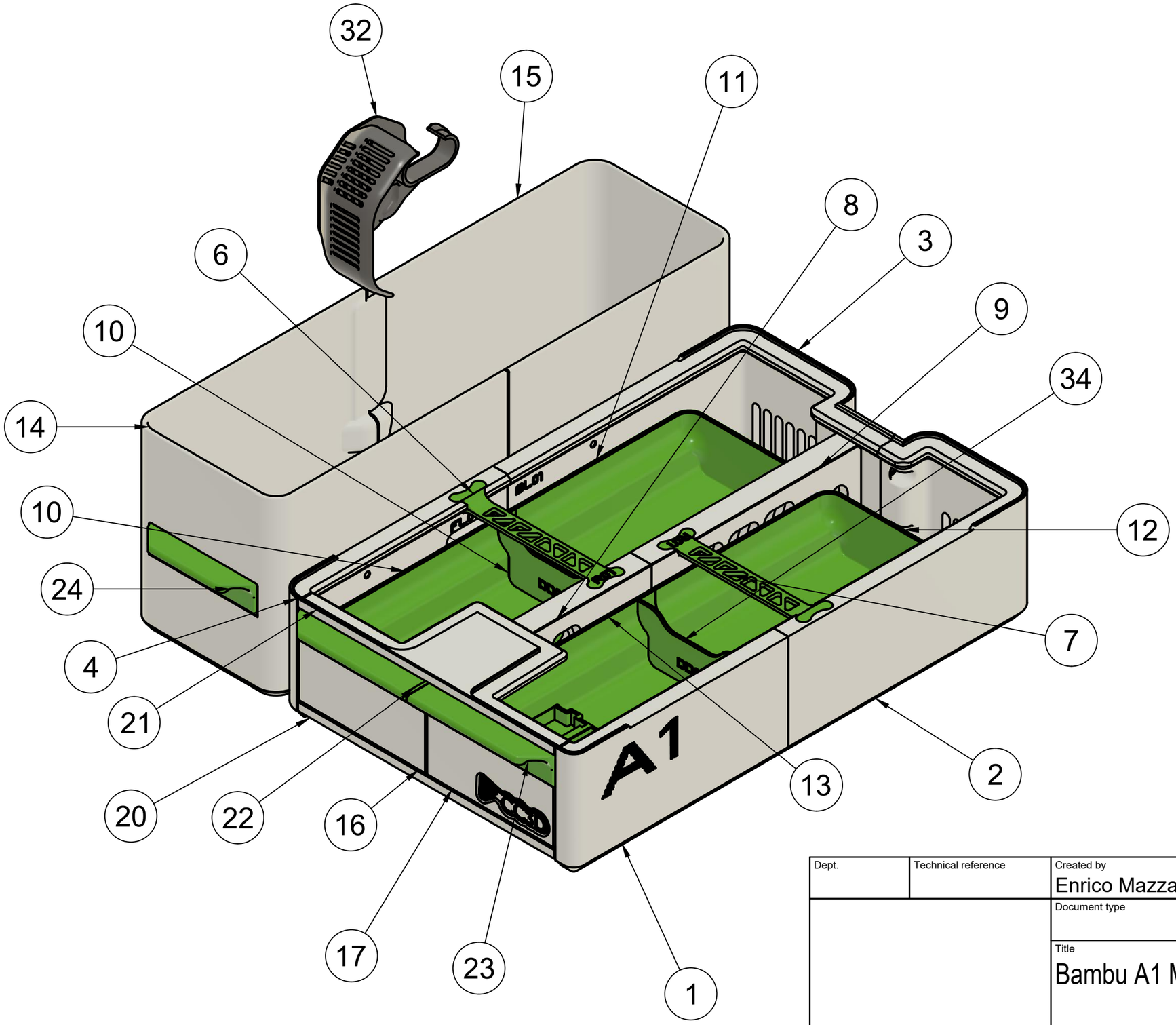

Parts List		
Item	Qty	Part Name
1	1	FR01
2	1	BR01
3	1	BL01
4	1	FL01
6	1	R01 (1)
7	1	R01
8	1	FC01
9	1	BC01
10	1	FD01
11	1	BD01
12	1	BD02
13	1	FD02
14	1	FPD01
15	1	BPD01
16	1	FFD01
17	1	FFD02
18	1	FFD01 (1)
19	1	FFD02 (1)
20	1	FBD01
21	1	FBU01
22	1	HD01
23	1	HD02
24	1	HPD01
32	1	PS01
33	1	DD01
34	1	DD01 (1)

Dept.	Technical reference	Created by Enrico Mazzarol 3/15/2024	Approved by
		Document type	Document status
		Title Bambu A1 Mini Dresser	DWG No.
			Rev. / Date of issue / Sheet 1/1