RaizR

RaizR IS AN EXTENSION THAT ATTACHES TO THE TOP OF THE PRINTERIT CREATES EXTRA SPACE FOR THE PTFE TUBE THAT FEEDS FILAMENT TO THE PRINT HEADIT ALSO ALLOWS YOU TO OPEN THE GLASS PANEL FOR BETTER CHAMBER VENTILATION AND MAKES IT POSSIBLE TO INSTALL AN LED STRIP FOR IMPROVED LIGHTING INSIDE THE PRINT AREA.

WWW.CC3DPROJECTS.COM

ALL MATERIAL PRODUCED AND PROVIDED HAS BEEN CONCEIVED, AUTHORED AND PRODUCED BY ENRICO MAZZAROL - ALL RIGHTS RESERVED.

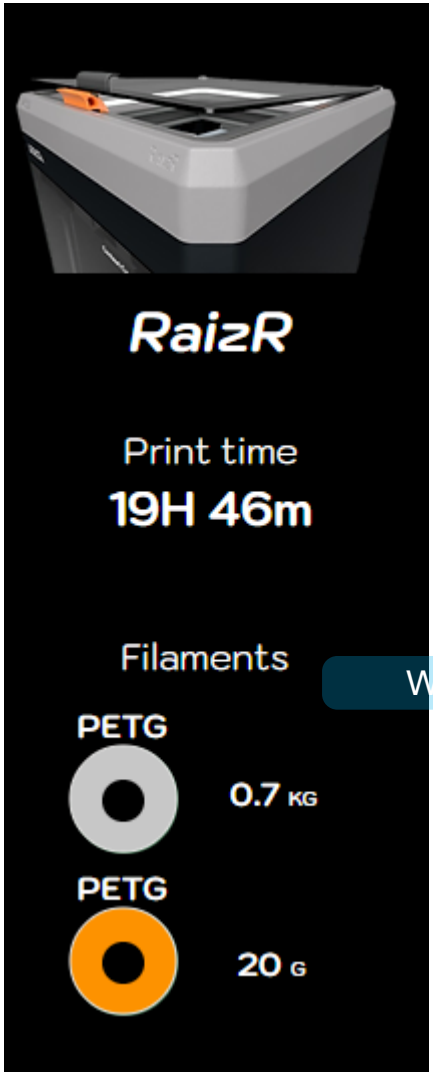

WWW.CC3DPROJECTS.COM

REQUIRED SPARE PARTS:

SCREW **M4 14 mm** — **5 units**

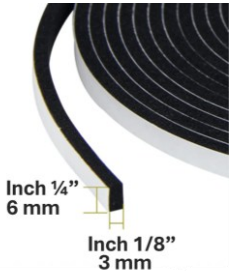

ADHESIVE GASKET — **4 M**

ALL MATERIAL PRODUCED AND PROVIDED HAS BEEN CONCEIVED, AUTHORED AND PRODUCED BY ENRICO MAZZAROL - ALL RIGHTS RESERVED.

M4 SCREW **0** MAGNET 8X2 **0**

RAIZER FRAME

RaizR CC3D

MAKE SURE ALL PARTS AND CONNECTION POINTS ARE CLEAN AND FREE FROM ANY DEBRIS OR LEFTOVER BITS. EVERYTHING SHOULD FIT TOGETHER NICE AND SMOOTH—NO ROUGH EDGES ALLOWED!

USE THE 3 PINS AND INSERT THEM IN TO THE BLUE HIGHLIGHTED HOLES TO FASTEN THE PARTS TOGETHER.
MAKE SURE THE PINS HAVE THE LETTER T FACING UP.

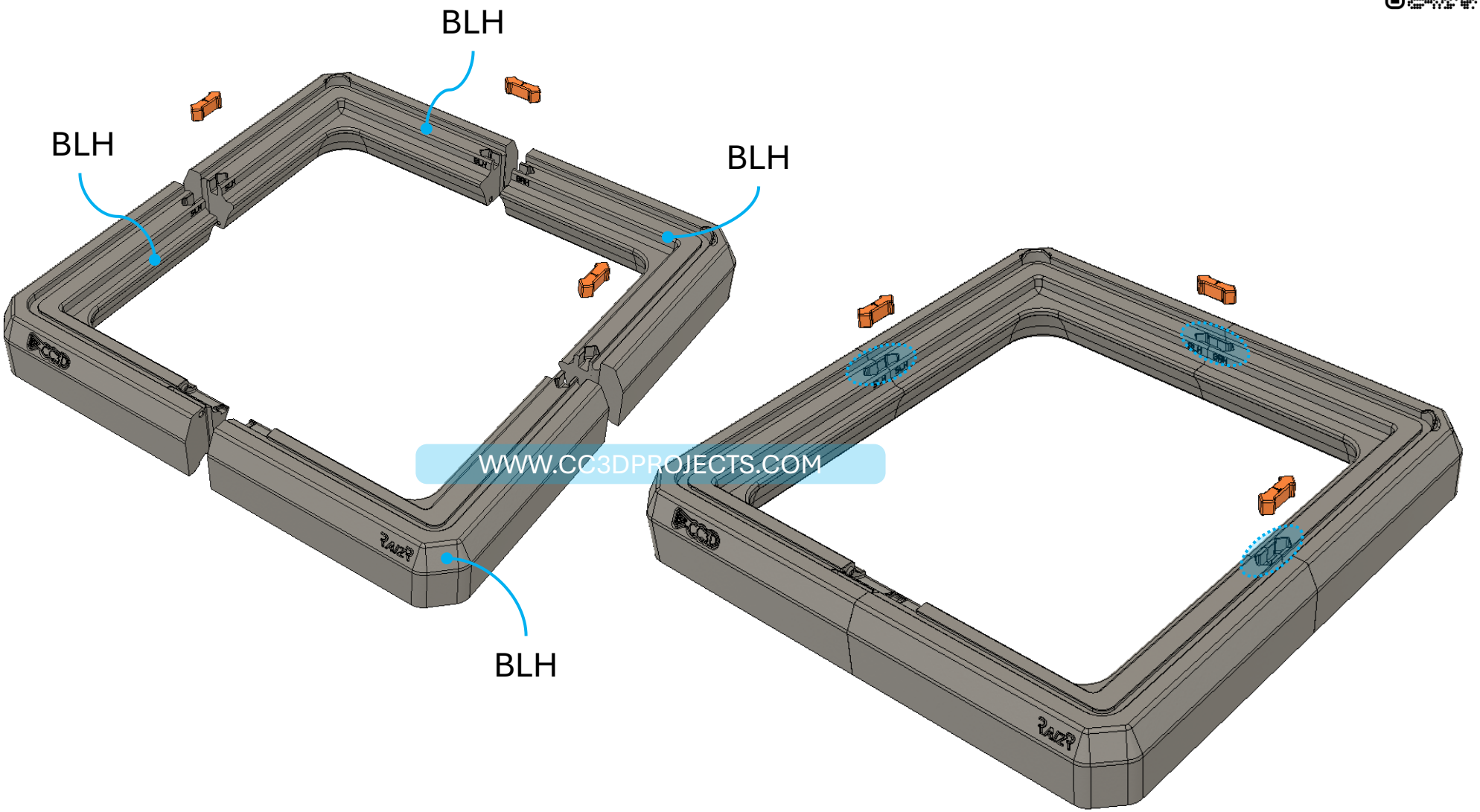

WWW.CC3DPROJECTS.COM

Buy me a coffee

ALL MATERIAL PRODUCED AND PROVIDED HAS BEEN CONCEIVED, AUTHORED AND PRODUCED BY ENRICO MAZZAROL - ALL RIGHTS RESERVED.

M4 SCREW **5**

MAGNET 8X2 **0**

RAIZER FRAME

RaizR CC3D

NOW YOU NEED TO INSERT AND TIGHTEN 5 SCREWSPAY CLOSE ATTENTION — 4 ARE ON ONE SIDE AND 1 IS ON THE OPPOSITE SIDEI'VE HIGHLIGHTED THE HOLES IN RED

Buy me a coffee

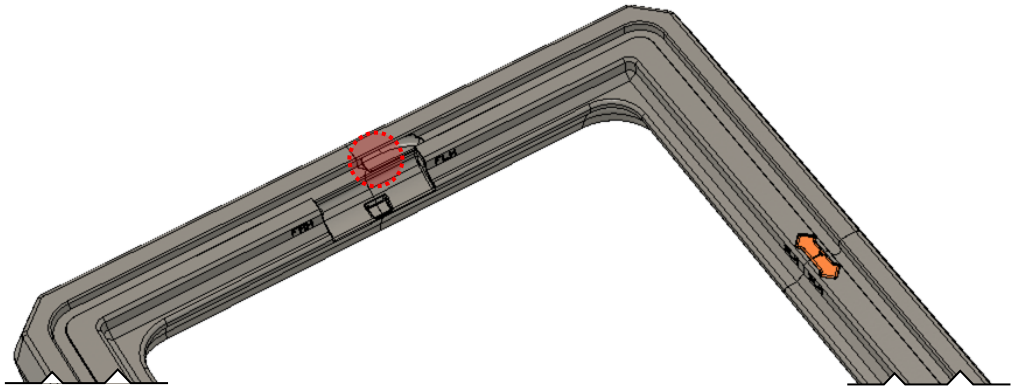

WWW.CC3DPROJECTS.COM

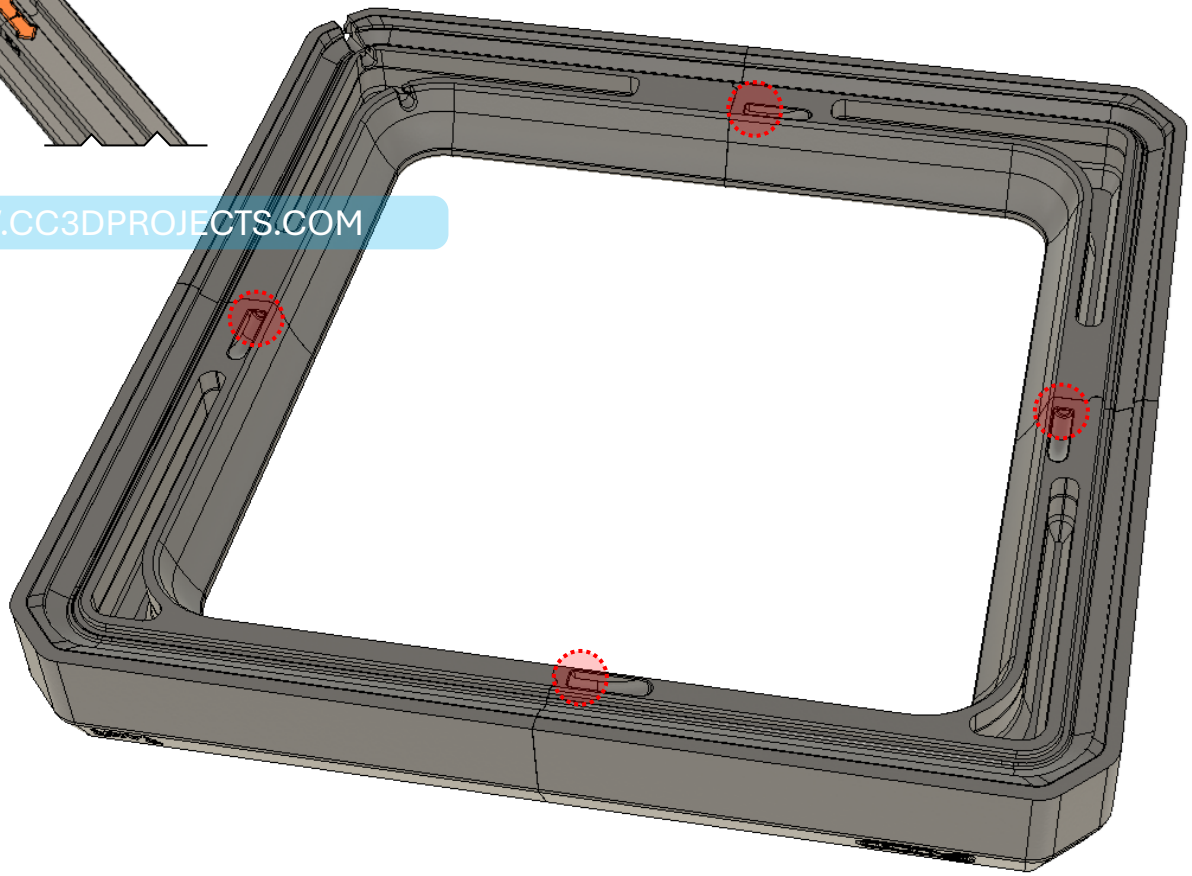

ALL MATERIAL PRODUCED AND PROVIDED HAS BEEN CONCEIVED, AUTHORED AND PRODUCED BY ENRICO MAZZAROL - ALL RIGHTS RESERVED.

M4 SCREW 0 MAGNET 8X2 0

RAIZER GASKETS

RaizR CC3D

NOW LET'S INSTALL THE FIRST SEAL — THIS ONE WILL CUSHION THE SPACE BETWEEN THE RAIZR AND THE PRINTER.

I'VE HIGHLIGHTED THE GROOVE IN BLUE WHERE YOU NEED TO INSTALL THE SEAL ALL AROUND THE PERIMETER

Buy me a coffee

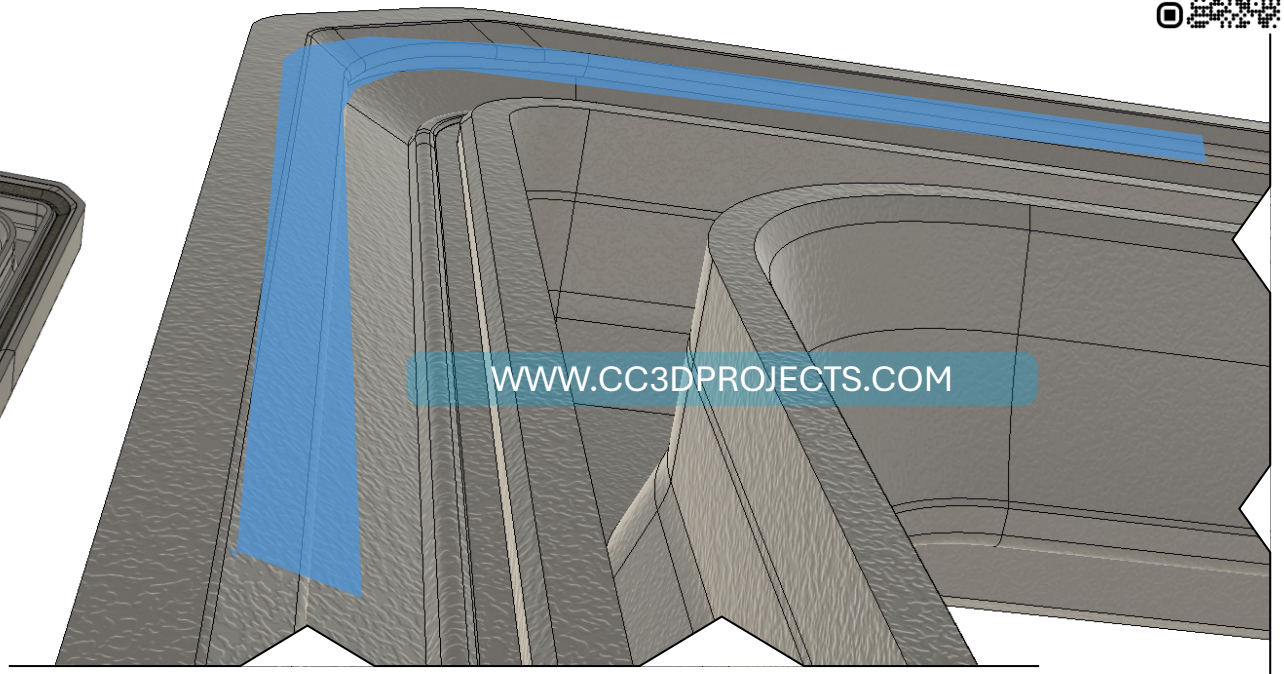

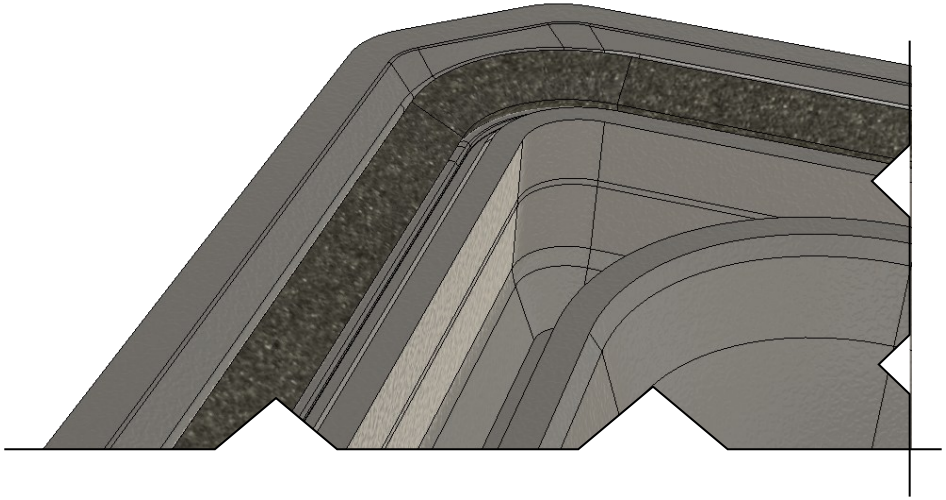

ALL MATERIAL PRODUCED AND PROVIDED HAS BEEN CONCEIVED, AUTHORED AND PRODUCED BY ENRICO MAZZAROL - ALL RIGHTS RESERVED.

M4 SCREW **0** MAGNET 8X2 **0**

RAIZER GASKETS

RaizR CC3D

Buy me a coffee

NOW FLIP THE RAIZR OVER AND APPLY THE SEAL THAT WILL CUSHION THE GLASS ON TOP OF THE RAIZR.

I'VE HIGHLIGHTED THE GROOVE IN BLUE WHERE YOU NEED TO APPLY THE SEAL AROUND THE ENTIRE PERIMETER.

IN ORANGE, I'VE ALSO HIGHLIGHTED A SMALL HOLE THAT SHOULD BE FILLED WITH A PIECE OF SEALING STRIP TO PREVENT THE GLASS SUPPORT—WHICH YOU'LL INSTALL LATER—FROM RATTLING WHEN LEFT IN THE PASSIVE POSITION.

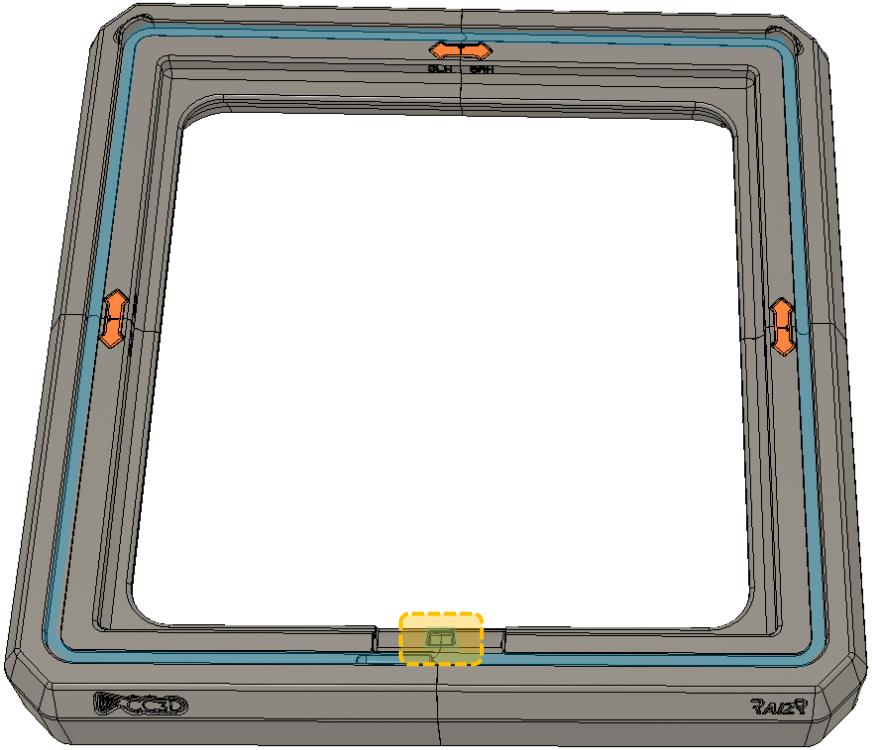

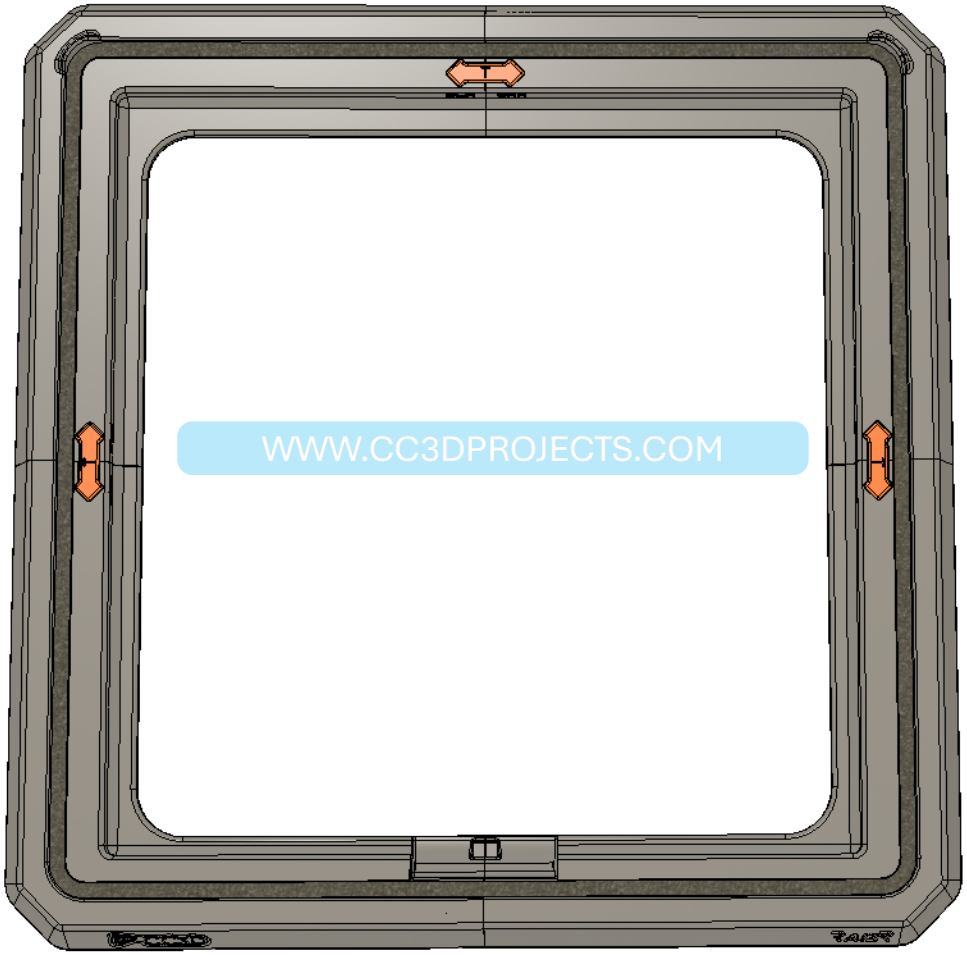

ALL MATERIAL PRODUCED AND PROVIDED HAS BEEN CONCEIVED, AUTHORED AND PRODUCED BY ENRICO MAZZAROL - ALL RIGHTS RESERVED.

M4 SCREW MAGNET 8X2

0 0

GLASS RAIZER

RaizR CC3D

NOW PREPARE THE REMOVABLE SUPPORT TO HOLD THE GLASS OPEN WHEN NEEDED.

AS HIGHLIGHTED IN BLUE, APPLY A PIECE OF SEALING STRIP AS SHOWN IN THE DIAGRAM

Buy me a coffee

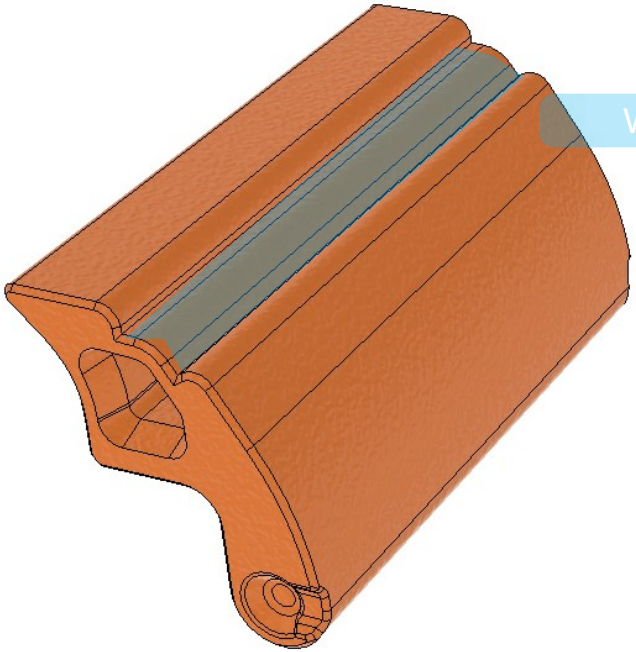

WWW.CC3DPROJECTS.COM

ALL MATERIAL PRODUCED AND PROVIDED HAS BEEN CONCEIVED, AUTHORED AND PRODUCED BY ENRICO MAZZAROL - ALL RIGHTS RESERVED.

M4 SCREW **0** MAGNET 8X2 **0**

GLASS RAIZER

RaizR CC3D

INSTALL THE GLASS SUPPORT BY SLIDING IT ONTO THE PINS ON THE RAIZR USING THE SLOTS, THEN TRY ROTATING IT TO TEST ITS FUNCTIONALITY.

Buy me a coffee

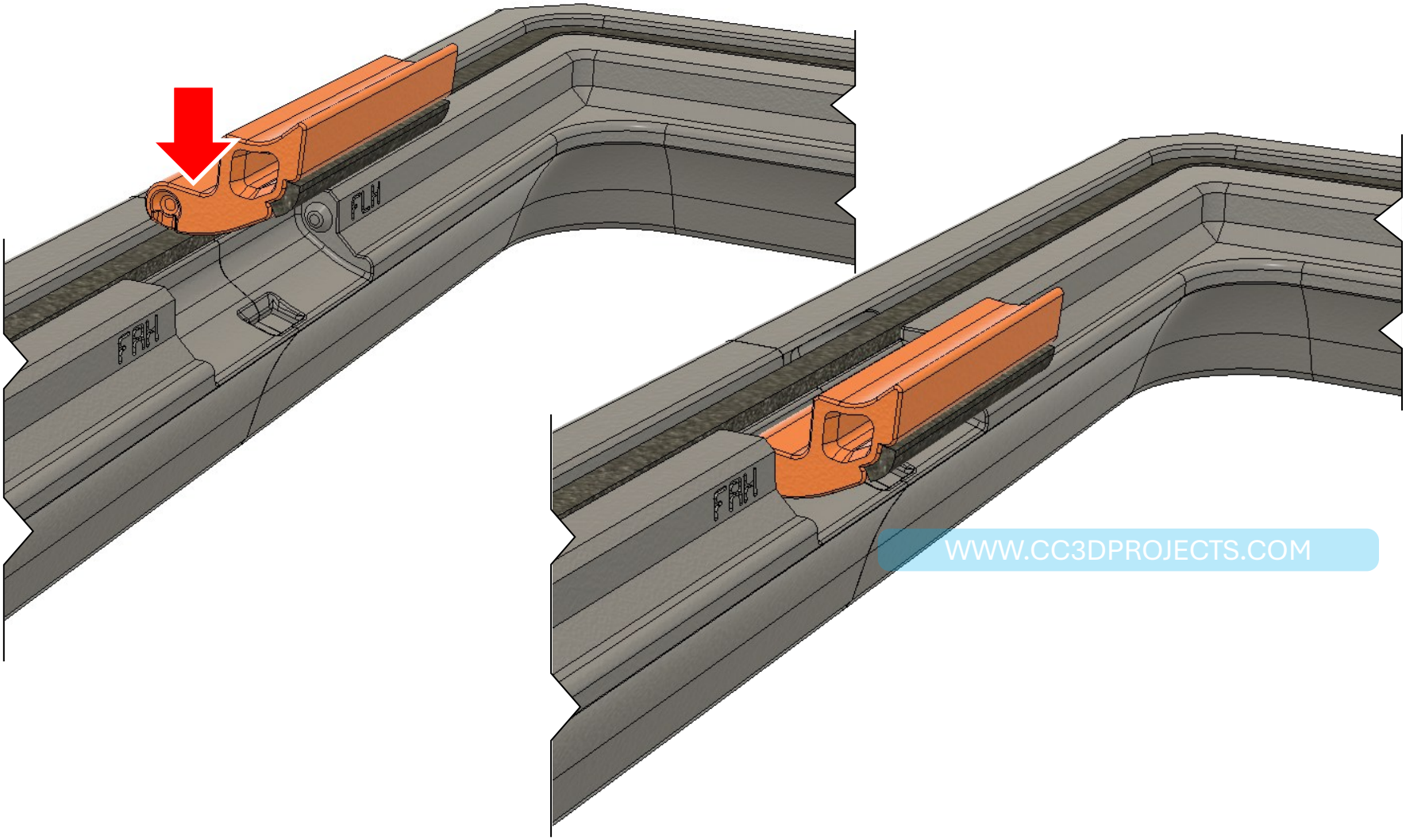

WWW.CC3DPROJECTS.COM

ALL MATERIAL PRODUCED AND PROVIDED HAS BEEN CONCEIVED, AUTHORED AND PRODUCED BY ENRICO MAZZAROL - ALL RIGHTS RESERVED.

M4 SCREW 0 MAGNET 8X2 0

GLASS RAIZER

RaizR CC3D

NOW I'LL SHOW YOU THE TWO OPERATING POSITIONS FOR THE GLASS LIFT SUPPORT

Buy me a coffee

PARKING OR PASSIVE POSITION – IN THIS POSITION, THE GLASS REMAINS CLOSED

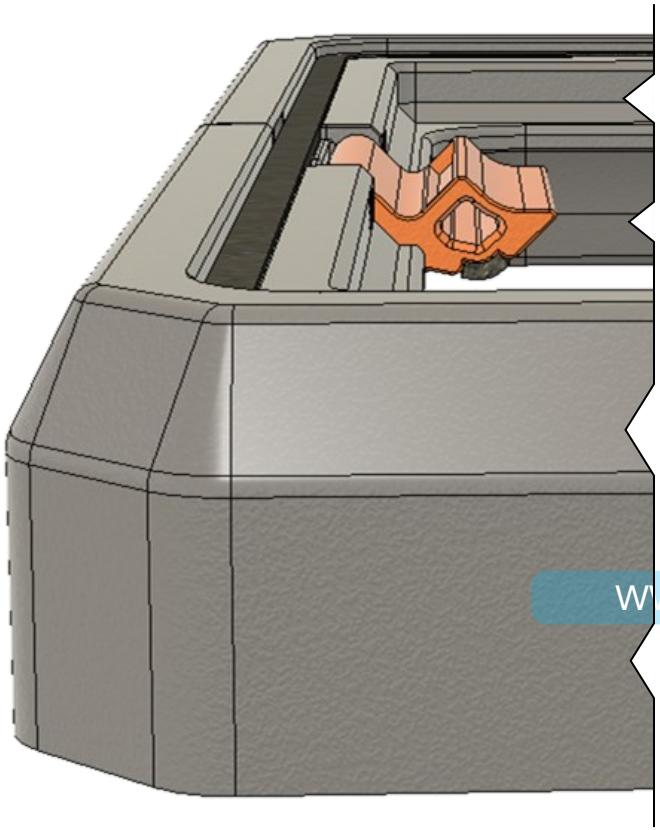

ACTIVE POSITION – IN THIS POSITION, THE GLASS STAYS LIFTED

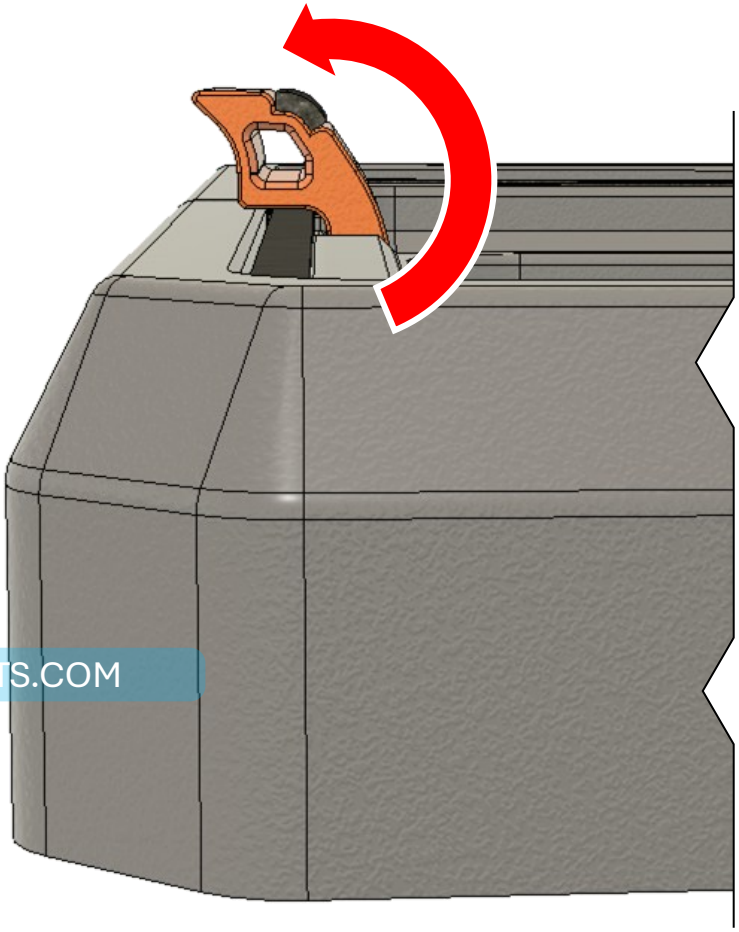

WWW.CC3DPROJECTS.COM

ALL MATERIAL PRODUCED AND PROVIDED HAS BEEN CONCEIVED, AUTHORED AND PRODUCED BY ENRICO MAZZAROL - ALL RIGHTS RESERVED.

M4 SCREW 0 MAGNET 8X2 0

LED STRIPE

RaizR CC3D

NOW LET'S MOVE ON TO INSTALLING THE LED STRIP. I RECOMMEND GETTING A ONE-METER STRIP — NO LONGER THAN THAT.

AS YOU CAN SEE, IT SHOULD BE APPLIED TO THE LEFT AND RIGHT SIDES, BUT NOT TO THE BACK, BECAUSE THE CAMERA MOUNTED ON THE PRINTER TENDS TO GET GLARE, WHICH CAN DARKEN THE IMAGE.

YOU'LL ALSO NOTICE I'VE INCLUDED A CABLE EXIT HOLE FOR THE STRIP IN THE BACK RIGHT CORNER OF THE RAIZR.

Buy me a coffee

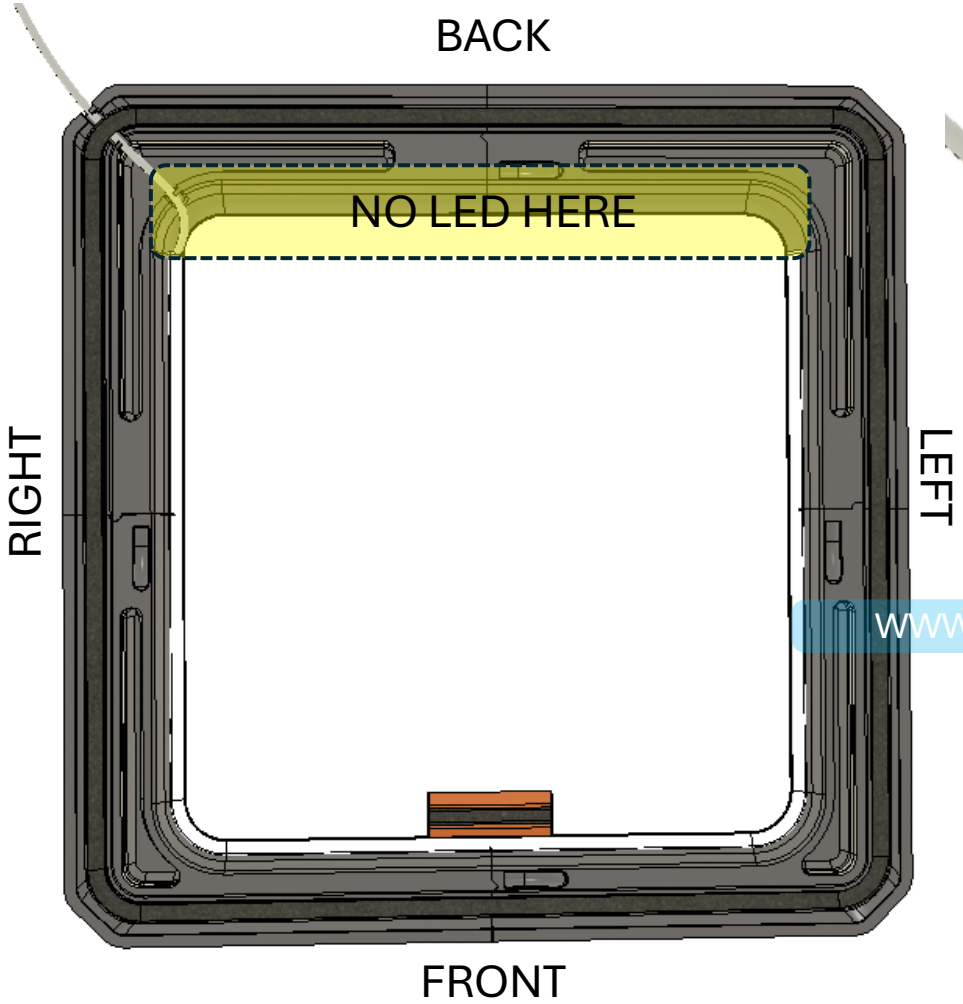

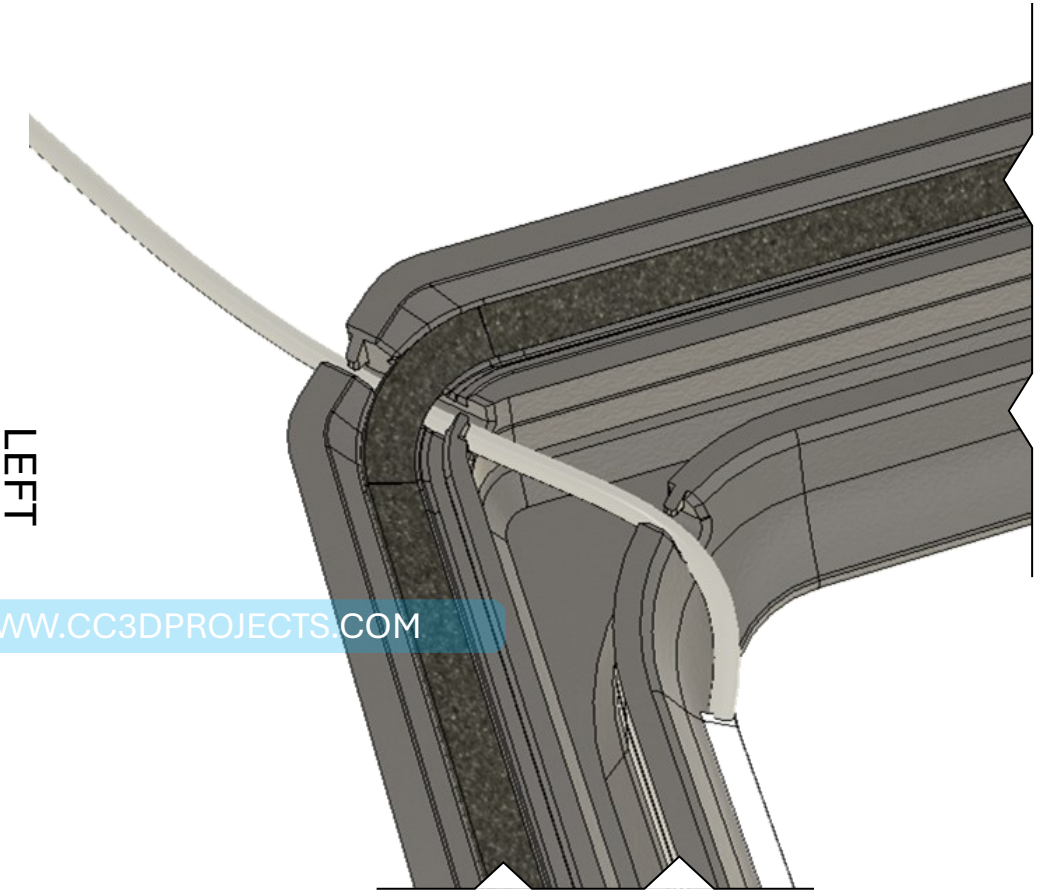

WWW.CC3DPROJECTS.COM

ALL MATERIAL PRODUCED AND PROVIDED HAS BEEN CONCEIVED, AUTHORED AND PRODUCED BY ENRICO MAZZAROL - ALL RIGHTS RESERVED.

M4 SCREW **0**

MAGNET 8X2 **0**

FINAL ASSEMBLY

RaizR CC3D

Buy me a coffee

NOW FOR THE EASIEST PART.

INSTALL THE RAIZR — JUST REMEMBER THAT THE BACK RIGHT SIDE IS WHERE THE LED CABLE COMES OUT.

PLACE THE GLASS ON TOP AND YOU'RE DONE!

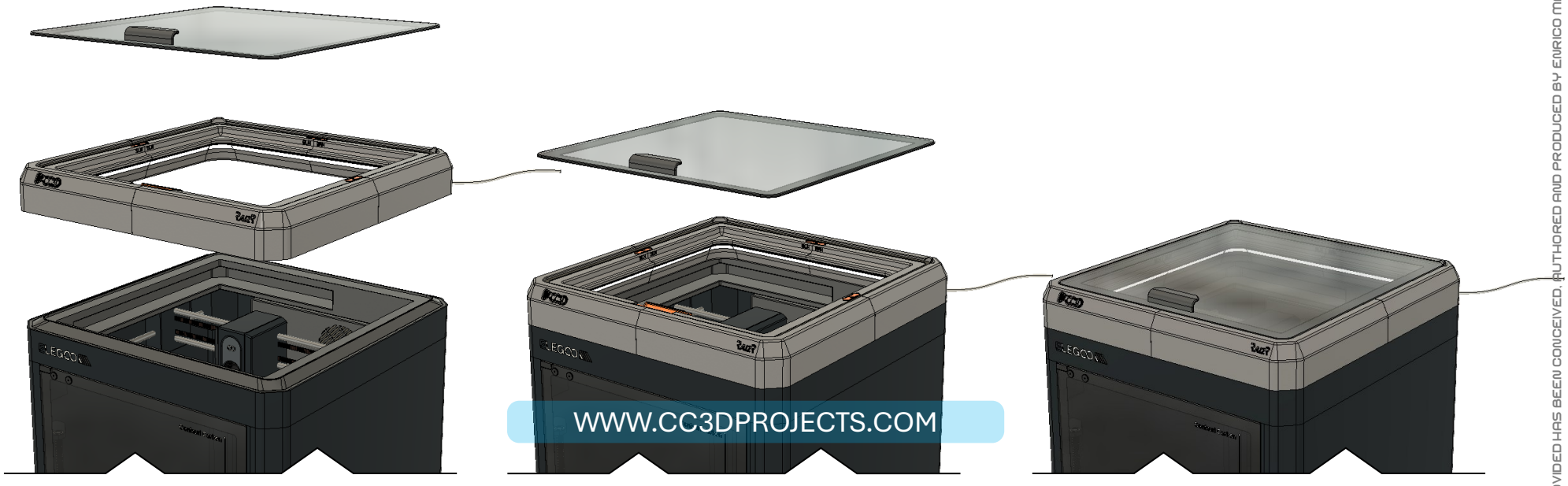

ALL MATERIAL PRODUCED AND PROVIDED HAS BEEN CONCEIVED, AUTHORED AND PRODUCED BY ENRICO MAZZAROL - ALL RIGHTS RESERVED.

THANKS FOR STICKING WITH ME THROUGH THIS ASSEMBLY GUIDE!

IT TOOK ME HOURS TO PUT THIS GUIDE TOGETHER, AND I TRULY HOPE IT'S BEEN CLEAR AND EASY TO FOLLOW.

IF THERE'S ANYTHING THAT WASN'T SUPER CLEAR OR IF YOU FEEL LIKE SOMETHING'S MISSING, DON'T HESITATE TO REACH OUT.

I'M ALWAYS HERE TO HELP AND PROVIDE ANY SUPPORT OR CLARIFICATION YOU NEED.

ENJOY YOUR NEW FEATURE!

CIAO!!!

Buy me a coffee

All material produced and provided has been conceived, authored and produced by Enrico Mazzarol - All rights reserved.

WWW.CC3DPROJECTS.COM

© 2025 CC3DPROJECTS. ALL RIGHTS RESERVED.

THIS MANUAL IS PROTECTED BY COPYRIGHT LAW AND MAY NOT BE REPRODUCED, DISTRIBUTED, OR USED IN WHOLE OR IN PART WITHOUT THE WRITTEN PERMISSION OF THE AUTHOR OR PUBLISHER. ANY VIOLATION WILL BE PROSECUTED TO THE FULLEST EXTENT OF THE LAW.

THE RaizR AND ALL ITS COMPONENTS, INCLUDING BUT NOT LIMITED TO DESIGNS, SCHEMATICS, ASSEMBLY INSTRUCTIONS, AND PHOTOGRAPHS, ARE THE EXCLUSIVE PROPERTY OF ENRICO MAZZAROL AND ARE PROTECTED BY COPYRIGHT LAW AND OTHER INTELLECTUAL PROPERTY LAWS.

COPYING, DISTRIBUTING, MODIFYING, REPRODUCING, TRANSMITTING, OR USING THE HDRY SYSTEM IN ANY FORM WITHOUT THE WRITTEN PERMISSION OF CC3DPROJECTS IS PROHIBITED.

FOR USAGE REQUESTS, PERMISSIONS, OR OTHER INQUIRIES, PLEASE CONTACT CC3DPROJECT@GMAIL.COM.

All material produced and provided has been conceived, authored and produced by Enrico Mazzarol - All rights reserved.